ALUVETRO
LO SGUARDO OLTRE

GARDA

Glass balustrades
for contemporary architecture.

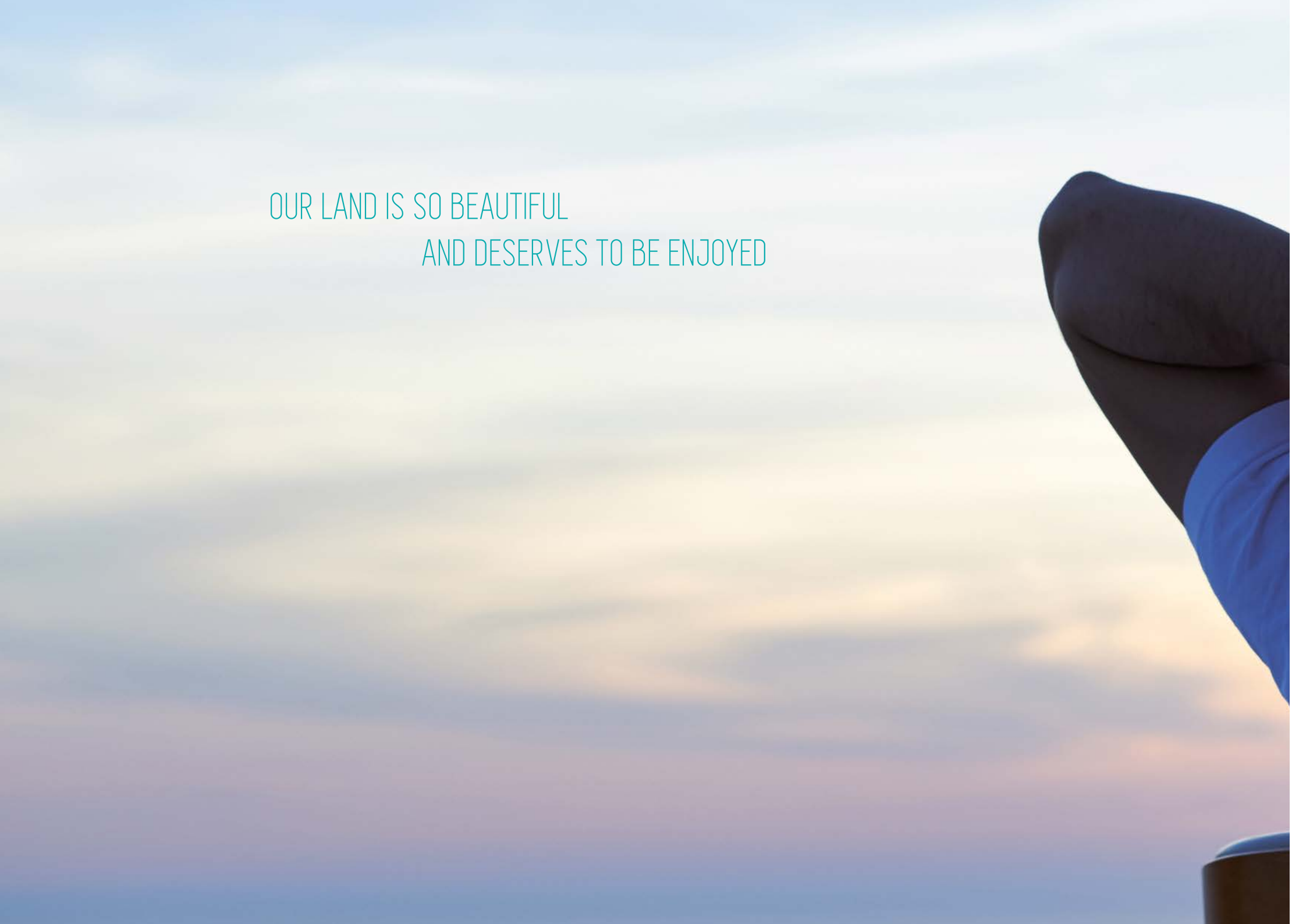

OUR LAND IS SO BEAUTIFUL
AND DESERVES TO BE ENJOYED

ALPIN PANORAMA HOTEL HUBERTUS - ph @Manuel Kottersteger

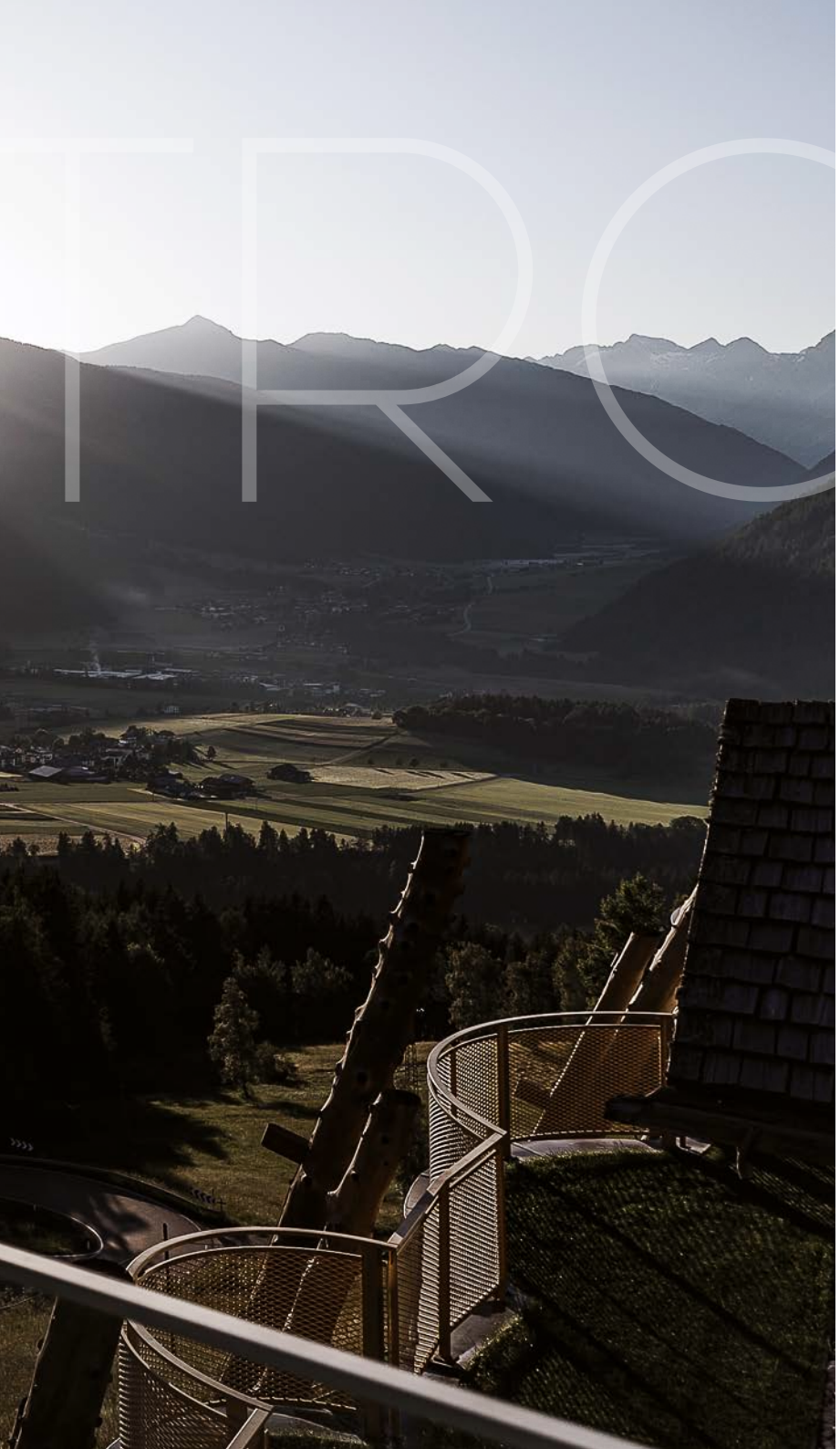

Table of Contents

6 Our history
7 Sustainability
8 Services
9 Commercial coverage
10 Safety and regulations
16 Product range
18 Intended use
22 The balustrade system
24 Glazing
27 Balustrades with LEDs
29 Cleaner Treatment
33 **Garda Balustrades**
38 Garda ONE
44 Garda SP
52 Garda AP
60 Garda FS
68 Garda MINI
75 Garda system benefits
82 **Point Balustrade**
88 **Lamina Canopy**
96 **Modular Balustrades**
98 Parts

1972 · 1990 · 2002 · 2006 · 2008 · 2009 · 2014 · 2015 · 2016 · 2017 · 2018

Our history

Aluvetro is among the most active players in the production and marketing of glass balustrades with patented, designed and manufactured aluminium and glass systems. We manufacture customised balustrade systems and create specific solutions, together with you.

Vetraria Pescini's 50 years of experience in flat glass processing and an entire production cycle, from design to product manufacture in our factory with compliance with regulations and certifications, guarantee a product of the highest quality.

Our fast growth shows that we work with great attention and professionalism, constantly improving our products and satisfying customer needs.

1972 Vetraria Pescini was founded.

1990 New machinery for double glazing production.

2002 The production site moved to new premises of 10.000 m² of which 3.000 m² are covered.

2006 New company extension of 2.000 m² built with sustainability criteria.

2008 Installation of the second stratified cutting line.

2009 Glass Project, Vetraria Pescini's new showroom dedicated to solutions and products mainly for interior design: sliding and hinged glass doors, parapets, balustrades, stairs, canopies, partition walls, walking surfaces, shower cubicles, mirrors, furniture and suspended curtain walls. Vetraria Pescini is one of the founding members of the Glass Group, the first independent Italian group that brings together the leading glass industries.

2014 **Aluvetro was founded** as a spin-off of Vetraria Pescini, which operates specifically in the field of glass and aluminium balustrades for interior and exterior use.

2015 The first Garda profile certified in Italy by the Giordano Institute is made.

2016 Launch of the new corporate image project. The Garda balustrade obtains German ABP certification.

2017 The new profile range is born.

2018 Construction of the new Aluvetro headquarters.

ALUVETRO
LO SGUARDO OLTRE

VETRARIA PESCINI

50th GRUPPO PESCINI Anniversary 1972- 2022

50 YEARS OF EXPERIENCE

THE EXPERIENCE OF PESCINI GLASSWORKS CREATED ALUVETRO. AN ENTIRE PRODUCTION CYCLE, CARRIED OUT IN COMPLIANCE WITH REGULATIONS AND CERTIFICATIONS.

2019 2020 2021 2022 2023

New Vetraria Pescini production area with doubling of glass processing line.

2019 Garda balustrades pass US hurricane tests. First placement on United States market.

2020 Garda balustrades obtain certificates of conformity according to Swiss regulations and the NOA certificate for Florida.

2021 The new Modular and Garda One systems are created. Modular FS is among the winners of the ADA, *Archiproducts Design Awards 2021*. Vetraria Pescini launches Optimus 70: the new solar control glass for maximum living comfort.

2022 Fiftieth anniversary of the Pescini Group.

2023 New strategic international partnerships.

Sustainability

Sustainability is a fundamental aspect of our corporate strategy: our ecological thinking begins with the design of each product, continues through the production procedures, and even to the disposal of materials. We require our suppliers and partners to comply with a set of strict ethical criteria with the aim of operating in a socially and ecologically responsible manner, minimising the impact of our activities on the environment. The factory features a 5000 m2 rooftop photovoltaic system in response to the necessary commitment to the widespread use of renewable energy sources. We are committed to finding production solutions that allow us to have the best utilisation of waste as a resource and the minimum production waste. Glass is a 100% recyclable material and our choice was to use sustainable solutions also derived from recycled raw materials. Most of our products have sustainable qualities, high durability, are maintenance-free and can be recycled.

Services

TECHNICAL DESIGN CONSULTANCY

The qualified staff is able to provide any kind of indication for the choice of the appropriate product with reference to its intended use, loads, and the best technological choice for the development of your project.

TECHNICAL AND SALES TRAINING COURSES

Our technicians can provide your staff with all design information regarding current regulations and the best solutions for the correct use of our balustrade systems. Training meetings are organised at our premises or at the customer's premises to train the sales staff.

SALES SUPPORT

We develop specific promotional corners, designed to enhance knowledge and visibility of glass balustrades.
Technical catalogues, displays, information materials, websites, advertising pages and all kinds of communication tools to promote products.

INSTALLATION ASSISTANCE

When required, an Aluvetro team leader will coordinate your installation teams to provide the necessary and useful instructions for subsequent installations.

TURNKEY SYSTEMS

We also support our partners with turnkey projects as a highly qualified manager, able to follow all project specifications directly, with optimisation of on-site procedures and adherence to schedules.

THE OPERATIONAL ORGANISATION

Aluvetro has an operational organisation capable of following each stage of the work, step by step, with proposals, materials and parts that ensure the best quality of the work and solutions capable of offering results at the highest level, from a functional and aesthetic point of view, in compliance with regulations.

Coverage Commercial

We are a company driven by a continuous commitment to growth, both nationally and internationally. Commercial coverage includes the Italian and foreign markets with the sale of products covering different uses.
Overseas distribution takes place in different countries.

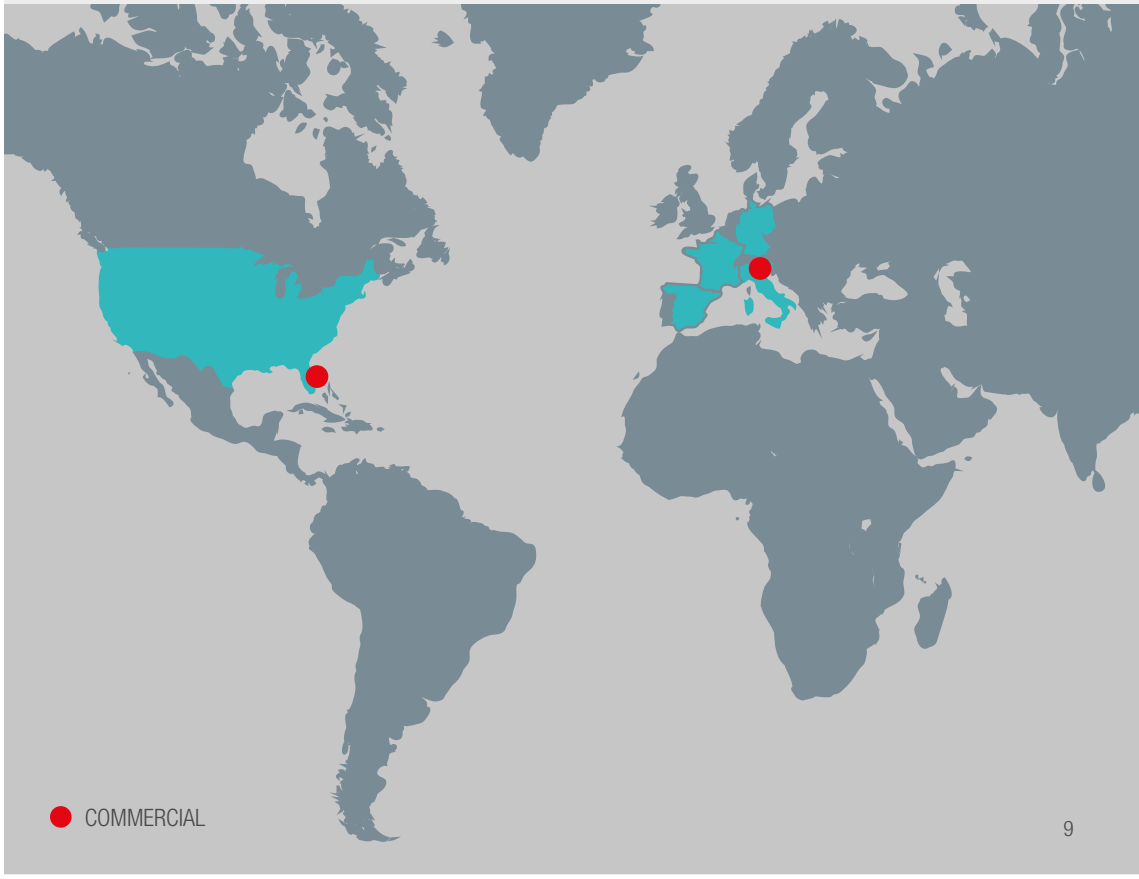

Safety

THE MAIN RULES TO BE OBSERVED**

NTC 2018 * STANDARDS UPDATE CONSTRUCTION TECHNIQUES

M.D. 17 January 2018

3.1.II OVERLOAD - Provides the required resistances for elements placed to protect against falling.*

UNI 7697: 2015 *

February 2015

UNI safety standard for the use of flat glass in construction. Provides guidance on the types of glass to use for balustrades.*

UNI 11678:2017 *

15 May 2017

"Glass in Building - Curtain wall elements in fall-proof glazing Resistance to linear static load and dynamic load - Test methods"

UNI standard

The standard defines the test methods to determine the behaviour of linearly distributed static loads and dynamic loads of glass cladding elements with fall protection function.

DM 236 *

14 June 1989

Technical provisions necessary to ensure the accessibility, adaptability and visiting of private buildings and of public housing, for the purpose of overcoming and the elimination of architectural barriers.

It provides the minimum height of railings and balustrades as well as information on the need for and types of handrails.

* In force at the time of printing, please check for changes, updates or new regulations

** without prejudice to any local regulations in force in the territory in which the end customer lives.

EXCERPT NTC 2018 - ITALIAN TECHNICAL STANDARDS

Table 3.1.II - Overload values for the different categories of building use

Category	Environments	kN/m
A	**Residential environments**	
	Areas for domestic and residential activities; included in this category are the premises of dwellings and related areas services, hotels **(excluding areas subject to crowding)**, hospital rooms	1,0
	Common stairs, balconies, platforms	2,0
B	**Offices**	
	Cat. B1 Offices not open to the public **(excluding crowded areas)**	1,0
	Cat. B2 Offices open to the public **(excluding crowded areas)**	1,0
	Common stairs, balconies, platforms	2,0
C	**Environments susceptible to crowding**	
	Cat. C1 Areas with tables, such as schools, cafés, restaurants, banquet, reading and reception rooms **(excluding crowded areas)**	1,0
	Cat. C2 Fixed seating areas, such as churches, theatres, cinemas, conference- and waiting rooms, university classrooms and lecture halls	2,0
	Cat. C3 Environments free of obstacles to the movement of persons, such as museums, exhibition halls, access areas to offices, hotels and hospitals, railway station lobbies	3,0
	Cat. C4 Areas with possible physical activities such as ballrooms, gyms, stages	3,0
	Cat. C5 Areas susceptible to large crowds, such as buildings for public events, concert halls, arenas for sports and related grandstands, bleachers and platforms	3,0
	Common stairs, balconies and platforms	Second category of use served ≥ **2,0**
D	**Environments for commercial use**	
	Cat. D1 Shops	2,0
	Cat. D2 Shopping centres, markets, department stores	2,0
	Common stairs, balconies, platforms	Second category of use served
E	**Areas for storage and commercial and industrial use**	
	Cat. E1 Areas for the storage of goods and their access areas, such as libraries, archives, warehouses, manufacturing workshops	1,0*
	Cat. E2 Environments for industrial use	To be evaluated on a case-by-case basis
F - G	**Garages and areas for vehicle traffic (excluding bridges)**	
	Cat. F Garages, traffic, parking and parking areas for light vehicles (laden weight up to 30 kN)	1,0**
	Cat. G Traffic and parking areas for medium-sized vehicles (laden weight between 30kN and 160 kN), such as access ramps, loading and unloading zones	1,0**
H - I - K	**Covers**	
	Cat. H Roofs accessible for maintenance and repair only	1,0
	Cat. I Accessible roofs of rooms of use category A to D	**Second categories of belonging**
	Cat. K Covers for special uses, such as installations, heliports	To be evaluated on a case-by-case basis

* Does not include any horizontal actions exerted by stored materials.

** For parapets or partition walls in pedestrian areas only. The actions on the barriers exerted by the vehicles will have to be evaluated on a case-by-case basis.

UNI 7697:2015

February 2015

Contents related to railings and balustrades

Points relevant to main actions and/or stresses to be considered in the design:

- Dynamic loads, wind, crowds, foot traffic, pressure and depression waves, etc.
- Impacts due to the contact with a person.

Type of sheet to be used

- Safety sheet: for parapets and balustrades, the minimum composition with performance class 1(B)1 must have an interlayer thickness of no less than 0.76 mm.

Where PR (Post Rupture) is assigned, it is necessary to limit the risk of immediate collapse. It is assumed that residual strength after breakage can be achieved by using laminated glass sheets with at least one of the following elements: annealed glass or toughened glass or interlayer that remains rigid at the temperatures at which the glazing is used. Rigid interlayer means interlayer belonging to family 2, as defined in pr EN 16613:2013.

In critical cases, it is recommended to carry out the verification under real conditions.

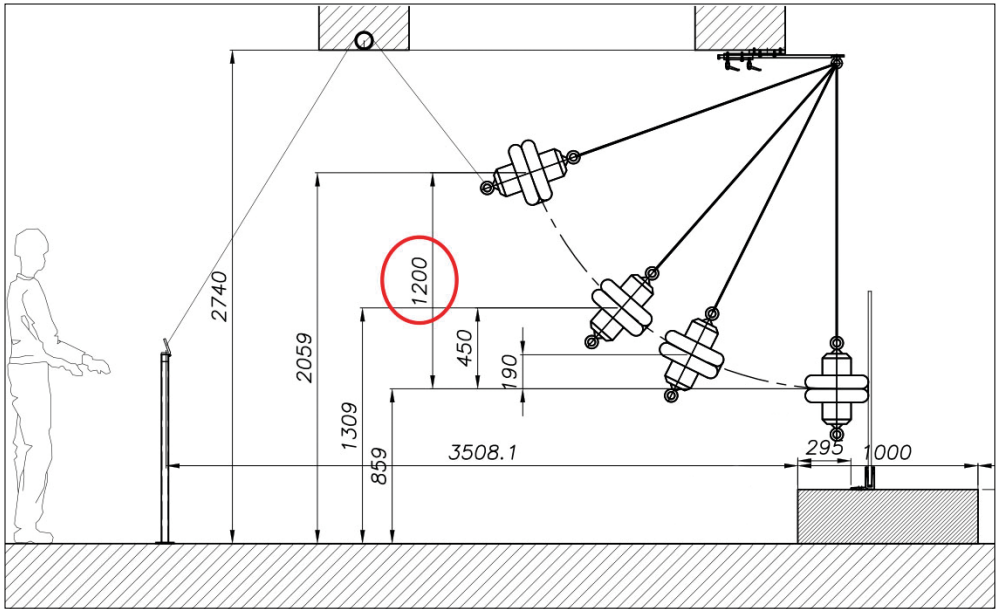

UNI 11678 2017

This standard defines the test methods for determining behaviour under static and dynamic loads and the requirements for the acceptability of test results.

Tests for determination of resistance to static linear load

The method consists of applying horizontally distributed static loads, measuring the displacements and observing any breaks in the system.

The following testing is required:

- LIMITED OPERATING STATUS the test load must be determined in accordance with current legislation (NTC)
- ULTIMATE LIMIT STATE the ultimate limit state load must be equal to the working limit state load multiplied by a factor of 1.5
- COLLAPSE LIMIT STATE. The purpose of the test is to determine the static linear load-bearing capacity of the element when partially impaired by previous failure

Tests for determining mechanical strength under dynamic load

The following testing is required:

- Hard body impact test (steel ball) - impact energy 10 J
- Semi-rigid body impact test, the impactor consists of two tyres mounted on steel weights, the total mass must be 50 Kg

DM 236 - 14 JUNE 1989

Technical prescriptions necessary to ensure the accessibility, adaptability and visiting of private and public residential buildings, in order to overcome and eliminate architectural barriers

8.1.8. Balconies and terraces.

The parapet must have a minimum height of 100 cm and be unpassable by a sphere with a diameter of 10 cm.

Balconies and terraces	
Minimum railing height	100 cm*
Minimum height of balustrades or parapets	100 cm*
Handrail height	90-100 cm*

* at the time of publication of this standard, MD 14 June 1986 no. 236, Chapter IV, Section 8.1.10.

N.B. It is necessary to check the planned height of the parapets with your municipality, as the majority of municipal technical offices have adjusted the minimum height for protection against falling to 110 cm; also check any restrictions given by internal regulations at health authorities.

European standards

	European Standards			
	Austria	Germany	France	Switzerland
Minimum parapet height	1 m	0,9 m	1 m	1 m

	Category	Handrail thrust loads			
Private house load not susceptible to crowding	**A/B/C1**	0,5 kN/m	0,5 kN/m	0,6 kN/m	0,8 kN/m
Tertiary buildings not susceptible to crowding	**C2** **D1/D2**	1,0 kN/m	1,0 kN/m	0,6 - 1,3 kN/m	1,6 kN/m
Buildings susceptible to crowding such as stadiums, theatres	**C3 - C5 - C4**	3,0 kN/m	2,0 kN/m	1,7 - 3,0 kN/m	3,0 kN/m

Category	Category
A	Residential environments
B	Offices
C1	Areas with tables, such as schools, cafés, restaurants, banquet, reading and reception rooms
C2	Areas with fixed seating, such as churches, theatres, cinemas, conference and waiting rooms, university lecture halls and auditoriums
C3	Environments without obstacles to the movement of people, such as museums, exhibition halls, access areas to offices, hotels and hospitals, railway station lobbies
C4	Areas where physical activities can take place, such as dance halls, gyms and stages.
C5	Areas susceptible to large crowds, such as buildings for public events, concert halls, sports halls and their stands, bleachers and railway platforms
D1	Shops
D2	Shopping centres, markets, department stores

* The values given in the table are indicative. They may vary according to country, reference region and height of fall.

Labor für Stahl- und Leichtmetallbau GmbH

Leitung: Prof. Dr. - Ing. O. Bucak
an der Hochschule München
Fakultät 02 Bauingenieurwesen / Stahlbau

Karlstraße 6, 80333 München
Tel. (0049) (0)89/ 1265- 2611, FAX 0049) (0)89/ 1265- 2696, e-mail: info@lsbonline.de

Bay 27

Allgemeines bauaufsichtliches Prüfzeugnis

Prüfzeugnis Nummer:	**P-2016-3084**
Gegenstand:	linienförmig gelagerte Verbundsicherheitsverglasungen
Glasaufbau:	VSG
Verwendungszweck:	Absturzsicherung nach DIN 18008-4 Zusatzanforderungen an absturzsichernde Verglasungen Bauregelliste A Teil 3 – Ausgabe 2015/2 Bauart nach Lfd. Nr. 2.12
Absturzsichernde Kategorie:	**B**
Auftraggeber:	**Aluvetro Srl Unipersonale** Via Lombardia 4/6 **IT- 25034 ORZINUOVI (BS)**
Ausstellungsdatum:	25.10.2016
Geltungsdauer bis:	24.10.2021

Aufgrund dieses allgemeinen bauaufsichtlichen Prüfzeugnisses ist der oben genannte Gegenstand nach Landesbauordnung anwendbar.

Das allgemeine bauaufsichtliche Prüfzeugnis umfasst 7 Seiten.

Dieses Prüfzeugnis darf nur ungekürzt veröffentlicht werden. Auszugsweise Veröffentlichung bedarf unserer ausdrücklichen Genehmigung.

ISTITUTO GIORDANO

Istituto Giordano S.p.A.
Via Rossini, 2 - 47814 Bellariga/Igea Marina (RN) - Italia
Tel. +39 0541 343030 - Fax +39 0541 345040
istitutogiordano@pec.it - www.giordano.it
PEC: m.giordano@legalmail.it
Cod. Fisc./Part. IVA: 00 549 540 409 - Cap. Soc. € 1.500.000 i.v.
REA: m-FC-224.A, (RN) 156766
Registro Imprese di Rimini n. 00 549 540 409

RAPPORTO DI PROVA N. 322619

(Il presente rapporto di prova annulla e sostituisce il rapporto di prova n. 320391 emesso da Istituto Giordano in data 25/11/2014)

Luogo e data di emissione: Bellaria-Igea Marina - Italia, 24/02/2015

Committente: VETRERIA PESCINI S.r.l. - Divisione ALUVETRO - Via Lombardia, 4/6 - 25034 ORZINUOVI (BS) - Italia

Data della richiesta della prova: 13/10/2014

Numero e data della commessa: 64500, 13/10/2014

Data del ricevimento del campione: 15/10/2014

Data dell'esecuzione della prova: 16/10/2014

Oggetto della prova: resistenza al carico statico orizzontale lineare secondo il D.M. Infrastrutture del 14/01/2008 e UNI 10806:1999, e resistenza al carico dinamico secondo le norme UNI 10807:1999 e UNI EN 14019:2004

Luogo della prova: Istituto Giordano S.p.A. - Via Erbosa, 72 - 47043 Gatteo (FC) - Italia

Provenienza del campione: campionato e fornito dal Committente

Identificazione del campione in accettazione: n. 2014/2065

Denominazione del campione*.

Il campione sottoposto a prova è denominato "GARDA SP 10/10 temperato-indurito".

(*) secondo le dichiarazioni del Committente.

Comp. AV Revis. PB	Il presente rapporto di prova è composto da n. 11 fogli.	Foglio n. 1 di 11

GIORDANO - Il presente documento o riferisce solamente al campione o materiale sottoposto a prova e non può essere riprodotto parzialmente, salvo approvazione scritta dell'Istituto Giordano.

Blackwater Testing, Inc. | 11/09/2018

Aluvetro
Via Lombardia 4/6,
25034 Orzinuovi (BS) - ITALIA
Phone: +39 030 9444433 Fax: +39 030 9946653

To whom it may concern,

RE: Letter of no financial interest in tested system ES-WW8701 for ESWindows.

Blackwater Testing Inc. has no financial interest in Aluvetro, GARDA SP300 (PL1 300) and GARDA SP200 (PL1 200) system tested at Blackwater Testing Inc. facilities through 10/08/2018--10/12/2018. Blackwater Testing Inc. was contracted by client, Aluvetro, to test specimen(s) and elaborate a test report for specimen(s).

NOV 0 7 2018

Dennis MANCILLO
Blackwater Testing Inc.
7341 Westport Pl Suite 1A
West Palm Beach, FL 33413
Ph. (561) 508-2830 Engdep@blackwatertesting.com

7341 Westport Pl Suite 1A, West Palm Beach, Florida 33413

19121 Parapetti Garda - Svizzera, Aluvetro - Garda 200 SP

solidic

PROGETTO:

Parapetto in vetro GARDA 200 SP

Contenuto:

01 Definizione resistenze del sistema tramite calcolo statico

REV.:00

DATA:28/02/2020

COMMITTENTE:
Aluvetro srl
Via Lombardia 4/6
I- 25034 Orzinuovi (BS)

solidic
Via Nicolodi 39
I-39100 Bolzano (BZ)

T +39 340 379 4992
info@solidic.it
www.solidic.it
VAT: IT 03010420218

Solidic - Structural Engineering - Nicolodistraße 39 - 39100 Bozen - Italy
Phone +39 340 379 49 92 info@solidic.it www.solidic.it

Data: 28.02.2020 Redatto: BF Pagina: 1

THE FOLLOWING PRODUCTS HAVE PASSED THE TESTS AND OBTAINED A DECLARATION OF CONFORMITY FROM A QUALIFIED TECHNICIAN, WITH REFERENCE TO THE REGULATIONS IN FORCE

GROUP 1, TYPE a

Bound on one side only, without handrail.
Continuous and/or punctual constraint
(linear with or without interruption).

Group 1 - type a				
SLE* kN/m	SLU kN/m	H walkway balustrade mm	Recommended product	Type of glass
1,0	1,5	1100	**SP - AP - FS 200 SP special-AP special 200 FS-FS special 200 ONE**	**8/8 T+I PVB**
2,0	3,0	1100	**ONE**	**8/8 T+T CLASS 2 8/8 T+I PVB 8/8 T+I EVA**
2,0	3,0	1100	**SP-AP-FS 200 SP special-AP special 200 FS-FS special 200**	**8/8 T+I CLASS 2 10/10 T+I PVB**
2,0	3,0	650	**Garda Mini**	**8/8 T+I PVB**
3,0	4,5	1100	**Garda SP-AP 300 Garda FS 300**	**10/10 T+T PLASTIC CLASS 2**

* values given NTC 2018

T: tempered - **I:** hardened

GROUP 2, TYPE b

Single-sided, with handrail
of load distribution between adjoining slabs.
Continuous and/or punctual constraint
(linear with or without interruption).

Group 2 - type b				
SLE* kN/m	SLU kN/m	H walkway balustrade mm	Recommended product	Type of glass
1,0	1,5	1100	**SP - AP - FS 200 FS-FS special 200 Garda Mini ONE**	**8/8 T+I PVB**
2,0	3,0	1100	**ONE**	**8/8 T+T CLASS 2 8/8 T+I PVB 10/10 T+I PVB 8/8 T+I EVA**
2,0	3,0	1100	**SP-AP-FS 200 SP special-AP special 200 FS-FS special 200**	**8/8 T+I CLASS 2 10/10 T+I PVB**
2,0	3,0	650	**Garda Mini**	**8/8 T+I PVB**
3,0	4,5	1100	**Garda SP-AP 300 Garda FS 300**	**10/10 T+I PVB 10/10 T+T CLASS 2**

* values given NTC 2018

T: tempered - **I:** hardened

Glossary

OPERATING LIMIT STATE (SLE)
SLE were beyond which the prescribed operating requirements were no longer met. With reference to glass fall arrest systems, UNI 11678 indicates that the identification of the load must be determined according to the legislation in force, at the time of printing according to MD 14 January 2018 (NTC 2018).

ULTIMATE LIMIT STATE (SLU)
SLU associated with the extreme value of the load-bearing capacity. With reference to glass fall arrest systems, UNI 11678 states that this value must be equal to the load at the serviceability limit state multiplied by a factor of 1.5

COLLAPSE LIMIT STATE
SLC a indicates the strength value and safety margin against collapse due to load actions after previous failure.

DESIGN LOAD
CDP A **design load** is the concentrated or distributed load that the design forecasts will place on a structure. This load will not cause any damage as long as the design specifications are adhered to.

POLYVINYL BUTYRAL
PVB plastic material used to join two or more sheets of glass by adhering them across the entire surface of the sheets. The lamination of the sheets with PVB takes place through the process known as lamination, which subjects the glass 'sandwich' to controlled temperature and pressure.
Laminated glass is safety glass made by joining two panels of glass that adhere to the entire surface by means of a plastic sheet of polyvinyl butyral (PVB). The laminate also called PVB glass is therefore characterised by the presence of the PVB film sandwiched with the two panels of glass. The composition is then heated to 70 °C and pressed with rollers to unite the materials and expel the air. This is done by placing it in an autoclave at constant temperature and pressure, which causes the air to be expelled and makes the product transparent.

STRATIFIED
are safety glass panels made by joining two panels of glass that adhere to the entire surface by means of an interlayer; they are considered safety glass if they meet the requirements of UNI 12543.

QUENCHING
thermal or chemical process that gives the glass greater resistance to mechanical and thermal stresses. In the event of breakage, the quenched glass shatters into small fragments.

HARDENING
thermal process that gives the glass a noticeable and increased resistance to mechanical and thermal stress. In the event of breakage, the hardened glass fragments to form large sheet segments. Toughened glass has lower strength characteristics than tempered glass.

HEAT SHOCK TEST
HST, an additional heat treatment to the quenching process that can significantly reduce (not eliminate) the risk of spontaneous breakage of quenched glass. This risk is due to the possible presence of nickel sulphide inclusions.

PLASTIC CLASS 2
it is a rigid interlayer that remains so at the temperatures of use of the glazing as defined by PREN 16613.

DOWNLOAD THE SPECIFICATIONS FROM **ALUVETRO.IT**

GARDA SYSTEM

GARDA ONE

FIXING
ABOVE FLOOR

GARDA SP

FIXING
ABOVE FLOOR

GARDA AP

FIXING
DROWNED FLOOR

GARDA FS

FIXING
SOLE FRONT

GARDA MINI

FIXING
ABOVE WALL

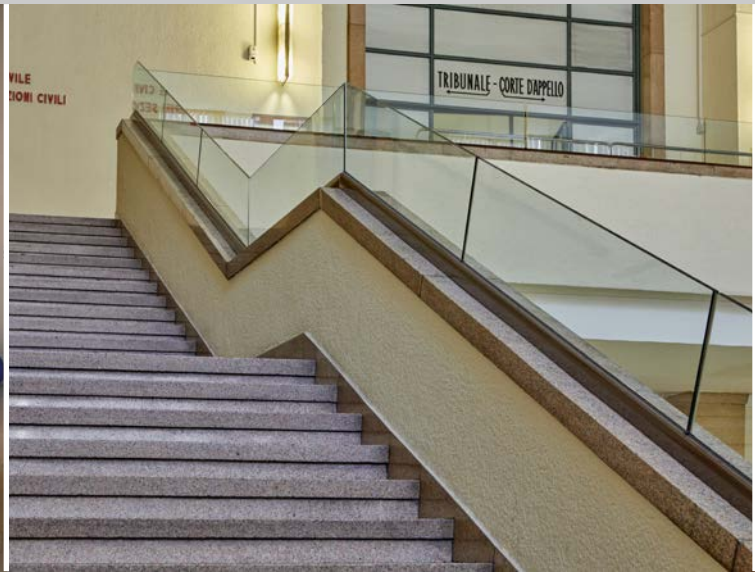

MODULAR SYSTEM

POINT

FRONT FASTENING
INSOLE FOR STITCHES

LAMINA

CANOPY

MODULAR SP

FIXING
ABOVE FLOOR

MODULAR FS

FIXING
SOLE FRONT

Intended use

INDOOR RESIDENTIAL

Glass balustrades are used in domestic environments,
are extremely versatile and suitable for contemporary environments,
with applications also as staircase parapets or mezzanines.

OUTDOOR RESIDENTIAL

For fences, terraces, swimming pool surrounds,
any kind of use in private spaces allows living
spaces without restricting the view and favouring
natural lighting.

SHOPPING CENTRES

In public areas, balustrades offer an architectural impact
of great lightness, combined with stability and safety:
they favour the usability of spaces by reducing the feeling of crowding.

Intended use

CONDOMINIUMS

Glass balustrades used in renovation or new construction projects offer numerous solutions in accordance with the law, with more or less opaque finishes to ensure privacy. The use of handrails further increases the values safety standards that are achieved by all products.

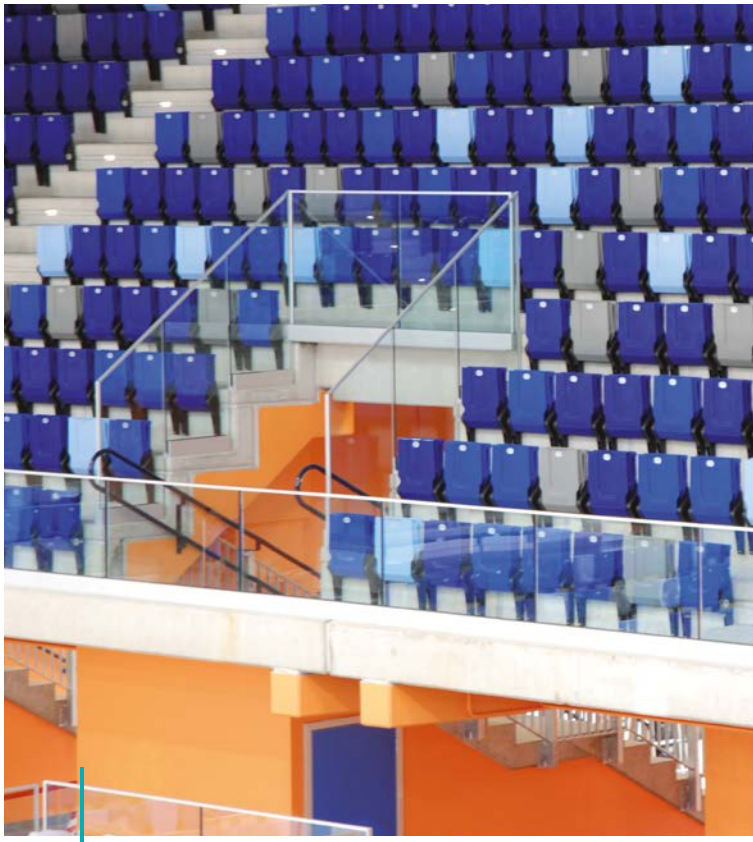

STADIUMS AND SPORTS CENTRES

Maximum transparency and maximum resistance for 100% enjoyment of every sporting event: even without handrails (which could obstruct the view in these environments).

HOTEL SECTOR

A sector in which the use of balustrades not only strongly characterises the realisations from an architectural point of view, but also enhances the feeling of well-being offered by the views of each location.

The system

1 THE PROFILE

It is made of extruded aluminium, drilled at the base every 25 cm, prepared for various types of fixing: available in 6 or 3 metre bars and cut to size on request.

2 THE FASTENING SYSTEM

It has an adjustable, patented set of clamps for fixing and glass adjustment, with thickness 17.52 - 21.52 - 25.52 mm (8/8.4, 10/10.4 and 12/12.4) and thickness 16.76 - 20.76 - 24.76 (8/8.2, 10/10.2, 12/12.2).

3 CARTERS

They are installed at the end of work, avoiding possible damage caused by operations installation and can also be customised at a later date with different colours.

CARTER SPECIAL

The different closing solutions allow the balustrade system to be integrated into any construction scenario. Recommended when finishing with plasterboard or vertical or horizontal sheet metal.

The carter

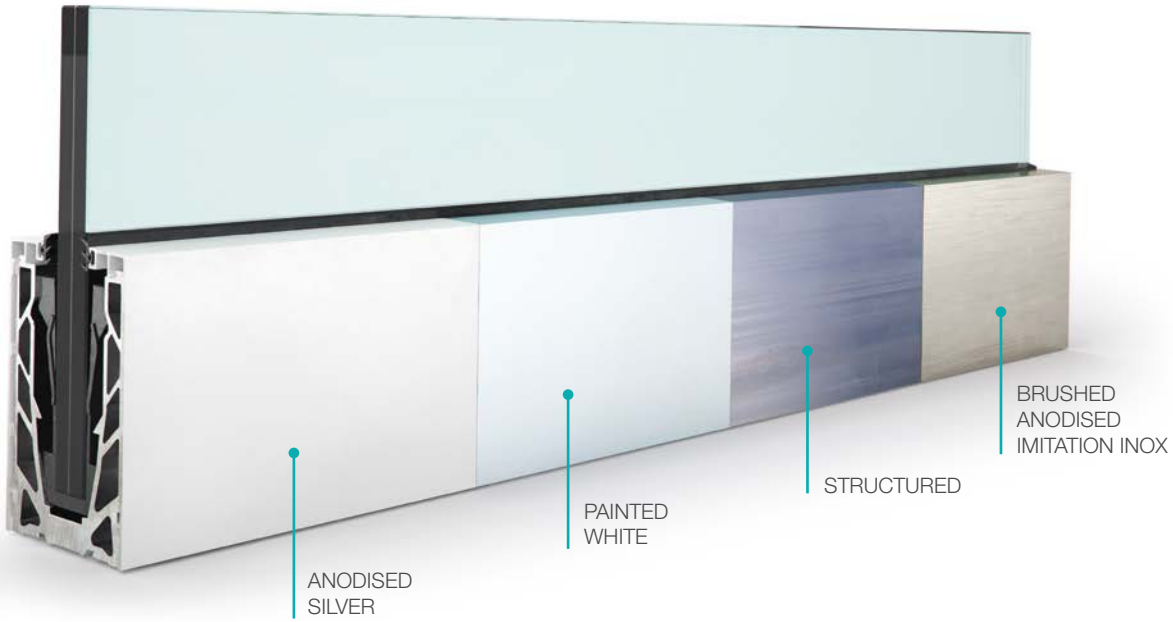

The **carters** undergo an anodising process, which provides a finish with aesthetic and, above all, protective characteristics, suitable for exposure to aggressive urban or marine atmospheres. Our profiles have a 20 micron anodisation.

CUSTOMIZING

The **carters** are available in 9 finishes and customised with anodising in the available colours or painting according to RAL tables. **Standard** and **designer finishes**, the result of research and development to meet contemporary architectural demands.

STANDARD FINISHES

- anodised silver
- brushed anodised imitation inox
- painted white
- structured

DESIGN FINISHES

- glossy (15 microns)
- champagne
- burnished grey
- dark bronze
- corten
- wood effect
- matt gold
- black anodised

STANDARD FINISHES


ANODISED SILVER


BRUSHED ANODISED IMITATION INOX

PAINTED WHITE


STRUCTURED

DESIGN FINISHES


GLOSSY (15 MICRONS)


CHAMPAGNE


BURNISHED GREY


DARK BRONZE

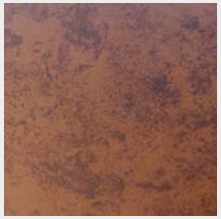
CORTEN


WOOD EFFECT


MATT GOLD


BLACK ANODISED

Glazing and customisation

The Garda system can mount **six different thicknesses of laminated and tempered glass:**

- 6/6.4 total thickness mm 17,52
- 8/8.4 total thickness mm 17,52
- 10/10.4 total thickness mm 21,52
- 12/12.4 total thickness mm 25,52
- 6/6.2 total thickness mm 16,76
- 8/8.2 total thickness mm 16,76
- 10/10.2 total thickness mm 20,76
- 12/12.2 total thickness mm 24,76

The 'finished product' is achieved with a choice of numerous colour combinations and different surface finishes: Float, Extra clear, Smoke, Bronze, Reflective, Various colours, opaque, partially opaque or shading screen prints to ensure privacy. Each solution can be combined with the use of LEDs to create a particularly striking lighting effect.

EXTRA CLEAR

FUMÈ

FLOAT

REFLECTIVE SURFACE

MILK WHITE

BRONZE

COLOUR ON REQUEST

Decorative glass

DUNE

ITALY

LINE

The use of **decorative glass** for balustrades **promotes privacy** and satisfies all aesthetic requirements.

Patterns or small motifs interrupt the continuity of the surfaces, creating alternating shiny and matt surfaces: many creative solutions with the guarantee of resistance and inalterability over time.

The use of LED creates additional **lighting and scenic effects** by exploiting the potential of light to illuminate the glass itself.

SHADED

THE INSERTION OF THE LED MAKES IT POSSIBLE TO ACHIEVE A STRIKING NIGHT EFFECT.

Balustrades with LEDs

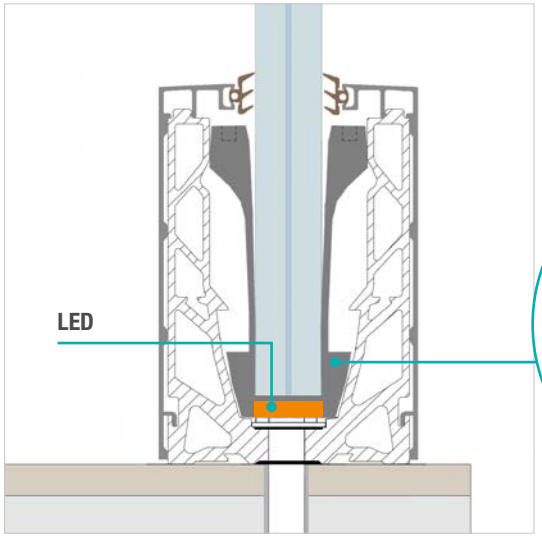

The clamp is designed to achieve light continuity on the entire base of the glass.

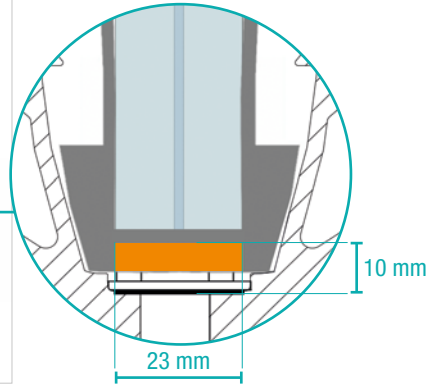

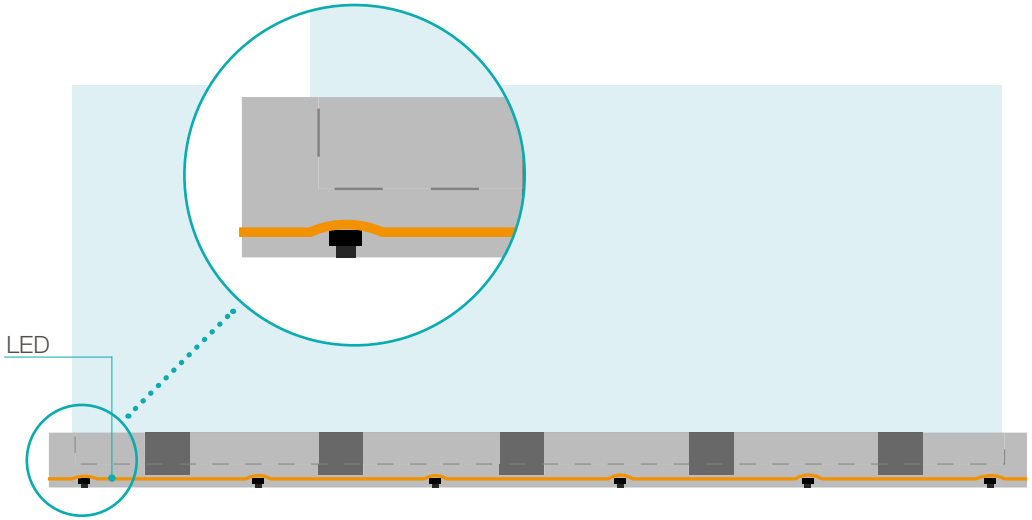

The laying of balustrades with LEDs:

1. Drill holes in the slab and secure the profile using the dowels provided.
2. Lay the LED strip inside the profile
3. Place the clamps inside the profile every 25 cm. Do not place the clamps at the fixing screws.
4. Insert glass, adjust tilt and tighten.

Conclude the installation of the system by connecting the LED to the electrical system. **It is advisable to assess with a professional every aspect of choosing the ideal LED and its installation.**

WHITE LIGHT

MULTICOLOR LIGHT (RGB)

Curved glass

Curved glass sheets can be mounted on all Garda balustrades with radii starting from a minimum of 200 cm and a horizontal or vertical curvature.

To make curved balustrades in plan view, the profiles are curved, as well as the carters, according to the request.

Cleaner Treatment

cleaner

CLEANER REDUCES DRASTICALLY THE TIME OF CLEANING AND MAINTENANCE OF BALUSTRADE GLASS

Cleaner is a treatment that protects glass by creating a dense and compact layer that **limits the adhesion and deposition of water, dirt and salts on the surface of the sheets**. It is therefore particularly suitable for applications on parapets and canopies installed in outdoor contexts.

It is applied with technologically advanced machinery to ensure uniform treatment.

GLASS TREATED WITH CLEANER:

- They are 100 per cent transparent
- They are strong and durable
- They do not yellow and do not stain
- Glass stays clean longer

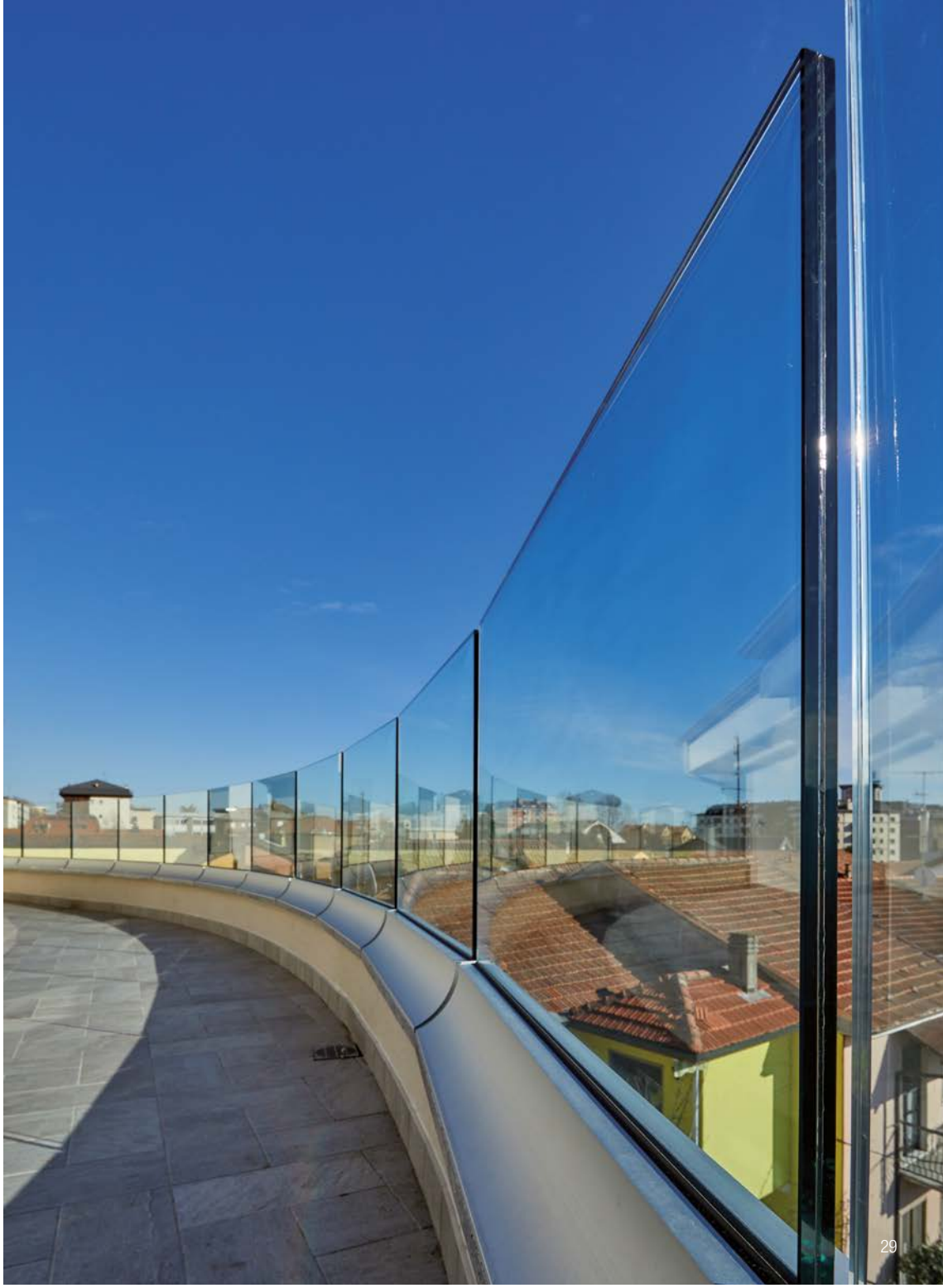

Cleaner Treatment

WHAT IT IS

Cleaner is a treatment that creates an ultra-thin invisible barrier that **protects surfaces** from stains or residues environment that could lead to the accumulation of dirt.

It transforms the normal glass area into a high-performance, **water-repellent surface** that makes cleaning considerably easier.

Cleaner enhances the natural brilliance of glass and is guaranteed not to yellow, chip, crack or discolour

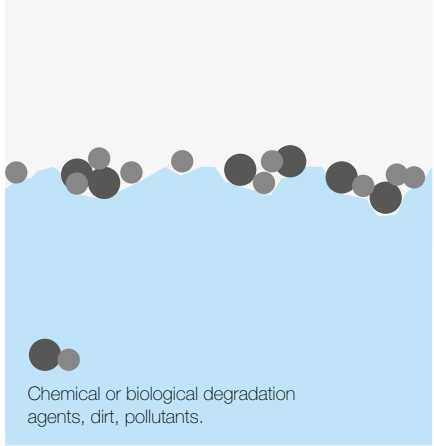

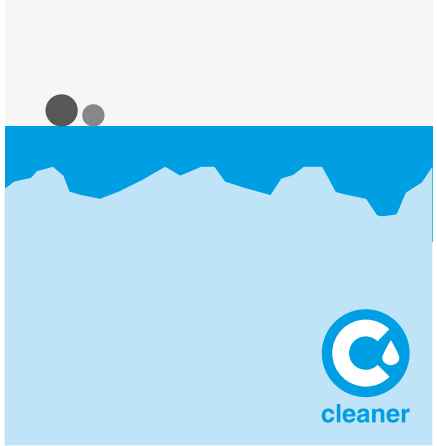

Benefits

- **Reduced wettability:** water runs off the glass quickly, preventing salts, dirt and pollutants from adhering to the surface.
- **Aesthetic effect:** Cleaner balustrades combine functionality and aesthetics in every façade.
- **Durability:** the treatment has high durability.
- **Maintenance:** drastically reduces the need for glass cleaning.
- **Running costs:** reduces the frequency of maintenance, resulting in significantly lower running costs.
- **Ecological choice:** is an ecological solution and a valuable support for sustainable building.
- **Pre-treated glass:** is applied in the company during the manufacturing stages.

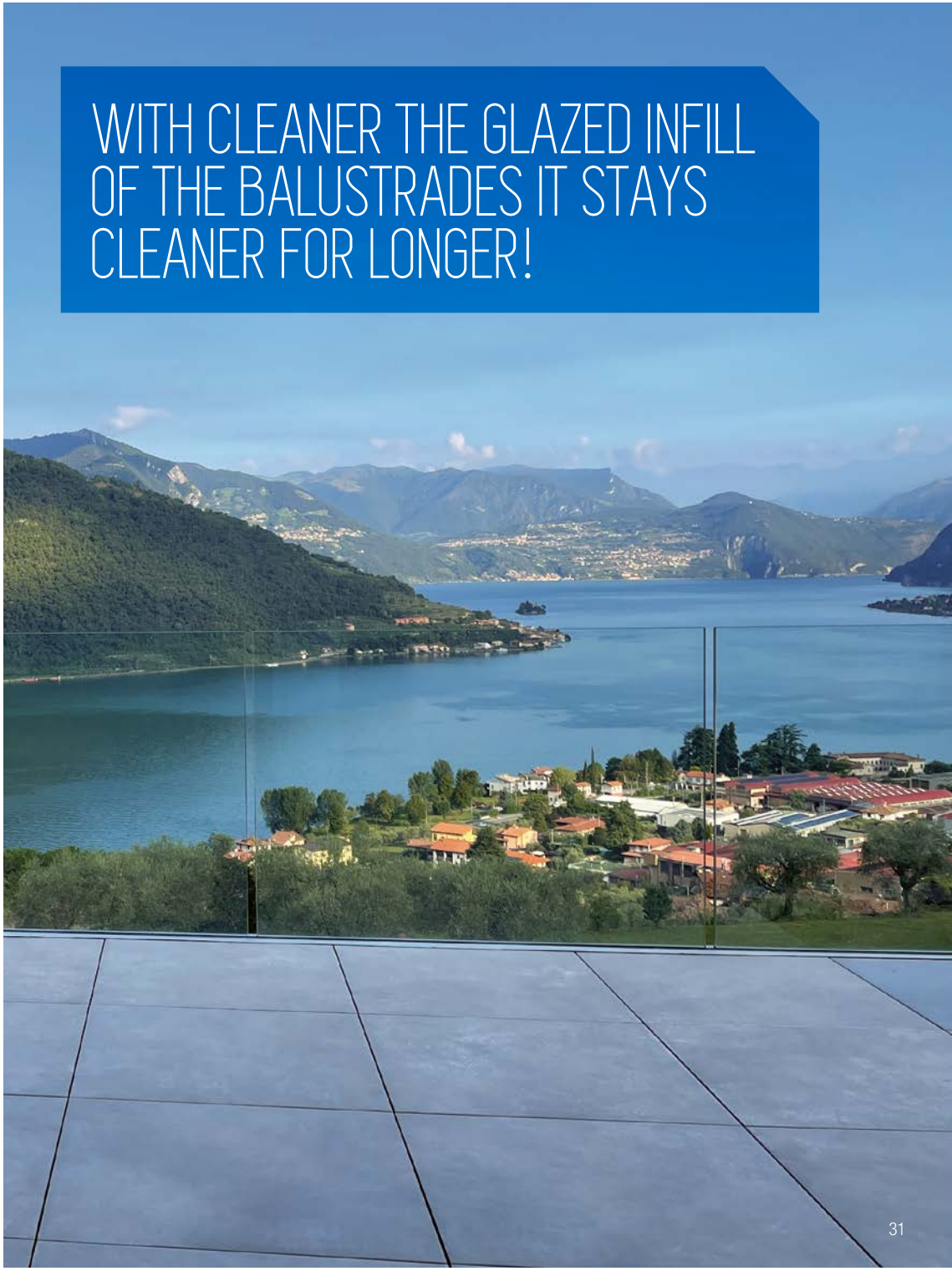

WITH CLEANER THE GLAZED INFILL OF THE BALUSTRADES IT STAYS CLEANER FOR LONGER!

GARDA

Thanks to the use of glass, Garda balustrades guarantee maximum formal cleanliness in new construction, renovation and restoration projects: they are available with or without handrails, according to a customisable system in more than twenty different architectural and colour combinations.

The Garda system, tested in certified laboratories, is made up of different elements (profile, fixing system, carter, laminated and tempered glass) designed to guarantee an easy and rapid assembly and an aesthetic result ideal for the world of contemporary architecture.

PUSH TEST UP TO **4,5 kN/m**

ISTITUTO GIORDANO

FLORIDA ZONE 4

ABP TEST

SWISS SIA 261 ÖNORM B 3716

Technical advantages

- System tested at certified laboratories
- The surface prevents children from climbing
- Quick and easy assembly
- Excellent noise abatement
- The profile allows water to drain away
- Maintenance limited to cleaning only

Aesthetic benefits

- Maximum transparency for an excellent view
- Excellent room brightness
- Customisation of carters and glass panels with finishes and colours
- Possible insertion of LED strips

DISCOVER ALL THE ADVANTAGES OF THE GARDA SYSTEM on page 75

system variants depending on type of fixing

Types of fixing	GARDA **ONE**	GARDA **SP**	GARDA **AP**	GARDA **FS**	GARDA **MINI**
					
FIXING TO THE BASE	GARDA ONE	GARDA SP 200 GARDA SP 300	GARDA AP 200 GARDA AP 300	-	GARDA MINI 200 GARDA MINI 100
LATERAL FIXING	-	-	-	GARDA FS 200 GARDA FS 300 with flat reinforcement GARDA FS 300 with tubular reinforcement	-

Types of fixing	GARDA **SP SPECIAL**	GARDA **AP SPECIAL**	GARDA **FS SPECIAL**
			
OFF-CENTRE BASE FIXING	GARDA SP 200 special	GARDA AP 200 special	-
LOWERED SLAB FRONT FASTENING	-	-	GARDA FS 200 special


CURVA SUD
CURVA SUD
CURVA SUD
CURVA SUD
CURVA SUD
G1-G12 | G13-G26
CURVA SUD
F1-F5 | F6-F25
CURVA SUD
E1-E5 | E6-E
D1-D5

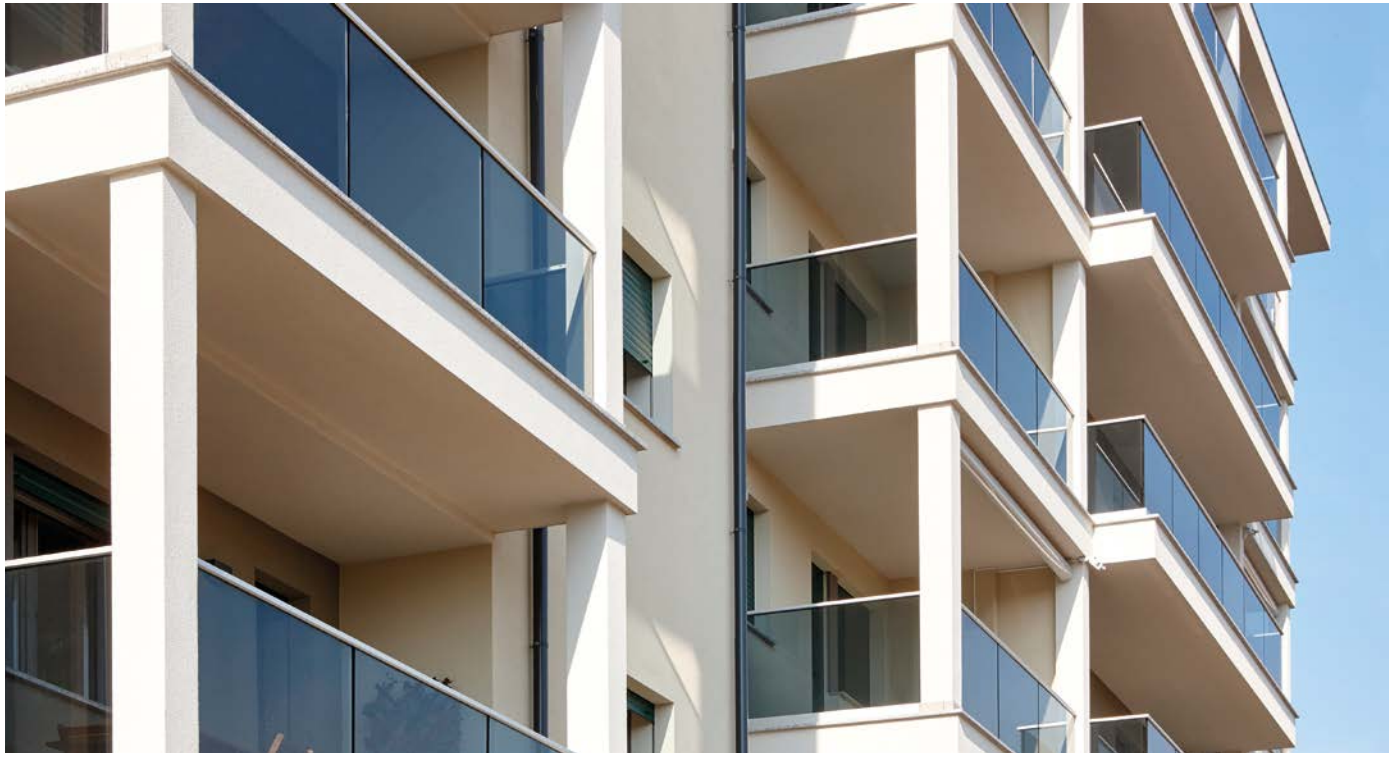

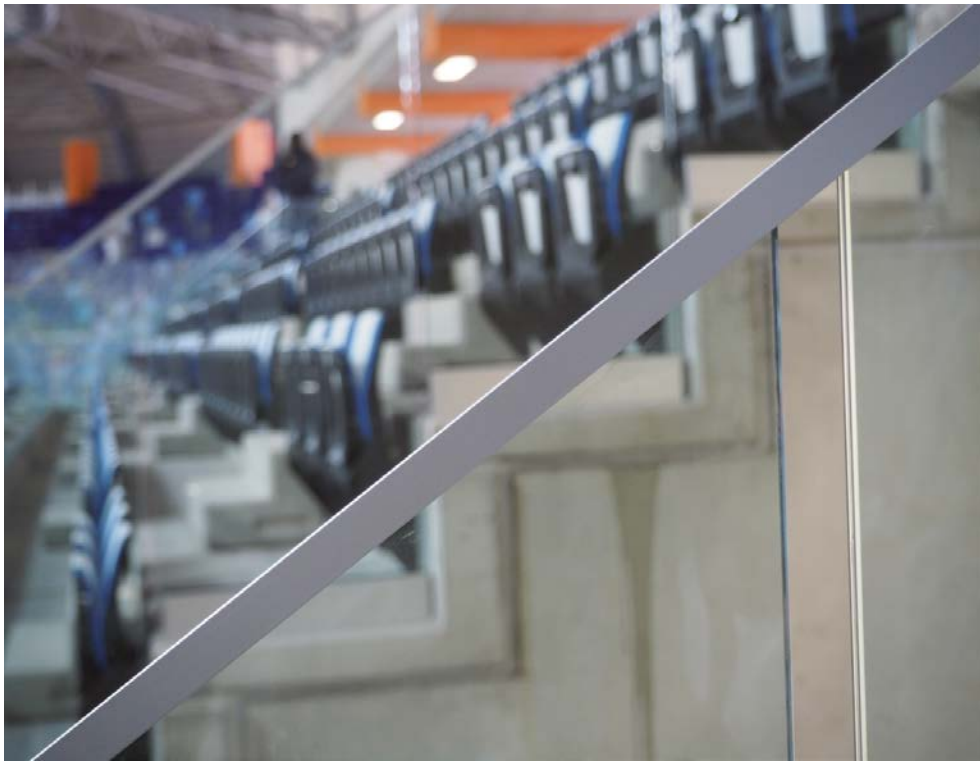

Handrails

GLASS

The purest and most minimalist version of the balustrade using ‘naked’ glass.

Finishes available on page 25

Scan the QR
and watch the video
laying the handrail

MINI

The best solution in cases where minimal and non-invasive support is needed.

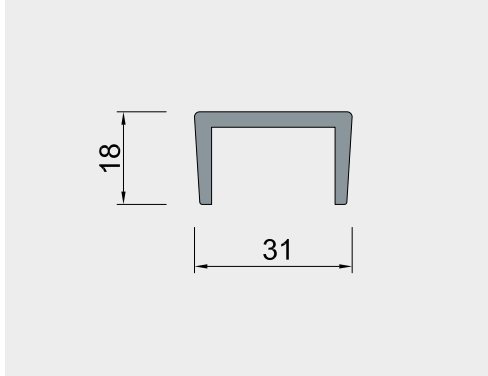

ROUND

A ‘soft’ shape that goes well with the sharp, square lines of each balustrade.

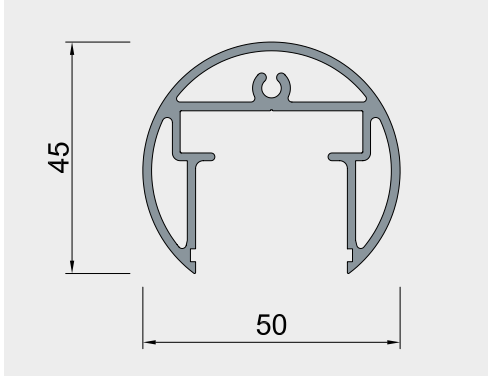

COMPACT

New design for solid support and secure grip.

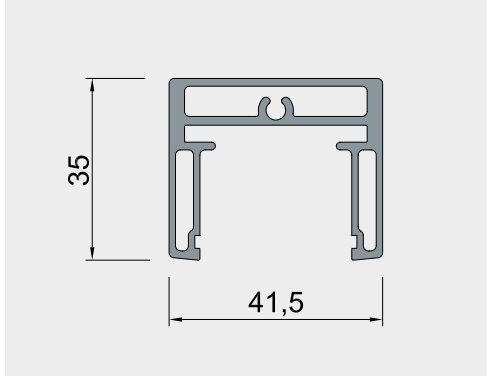

	MINI	ROUND	COMPACT
CAPS AND JUNCTION BRACKETS see page 117	no	yes	yes
GLASS THICKNESSES	8/8 - 10/10	6/6 - 8/8 - 10/10 - 12/12	6/6 - 8/8 - 10/10 - 12/12
APPLICATION	with double-sided adhesive tape or silicone*	with mandatory seal*	with mandatory seal*

* to be ordered separately

GARDA ONE

FIXING **ABOVE FLOOR**

ISTITUTO GIORDANO

HOTEL RISTORANTE - ISEO (BS)

GARDA ONE

Glass tilt adjustment **± 15 mm**

USABLE GLASS THICKNESS (mm)

8 + 8 + 0,76
8 + 8 + 1,52
10 + 10 + 0,76
10 + 10 + 1,52

Glass type on page 14

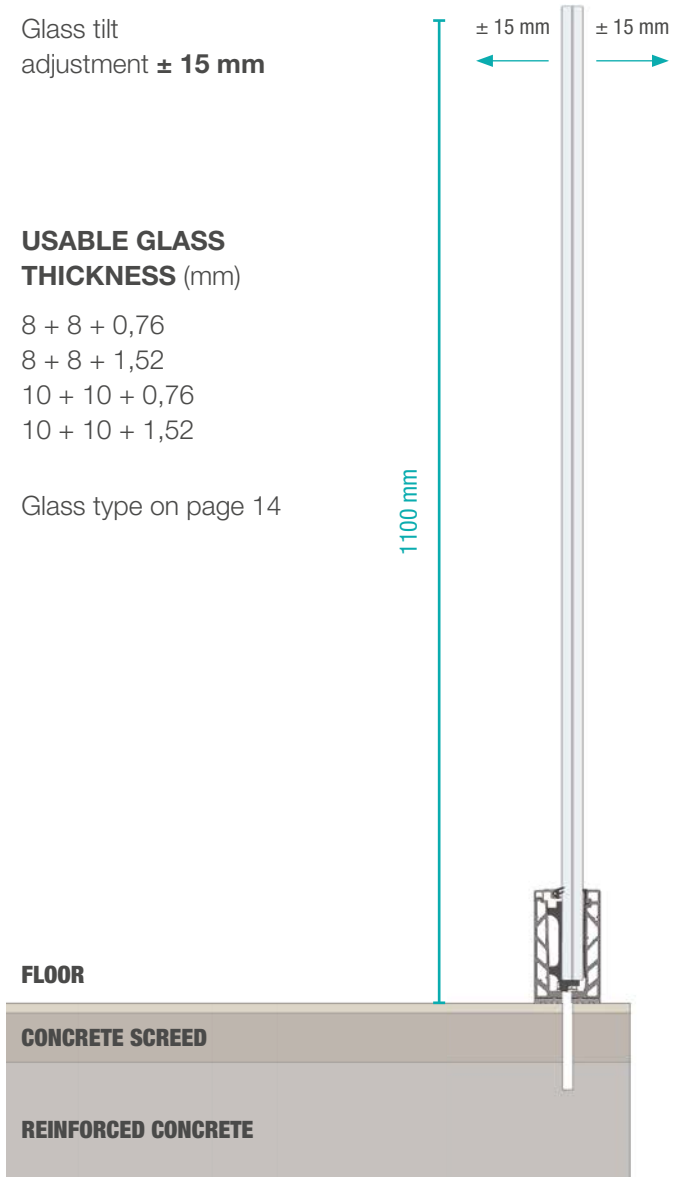

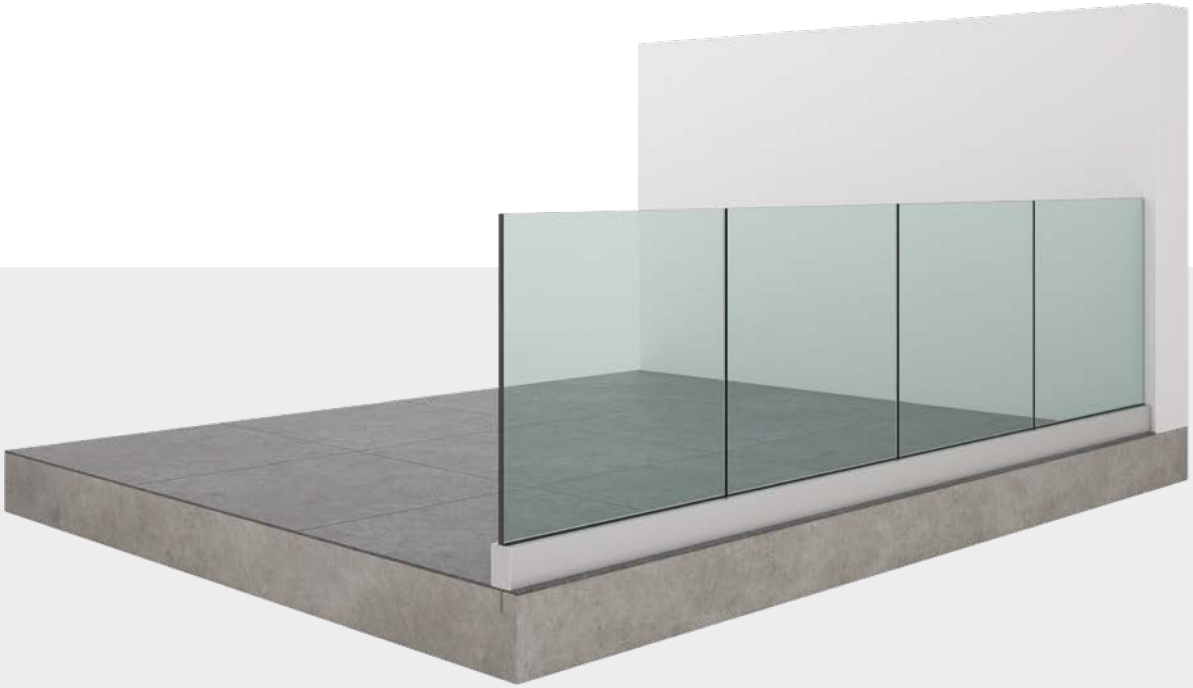

The balustrade with a compact profile

With above-floor fixing, it is designed for clamping and adjustment of the glass to be carried out from the inside only.

The profile is supplied protected by an anti-scratch film, which is to be removed after completion of the construction site.

GARDA ONE

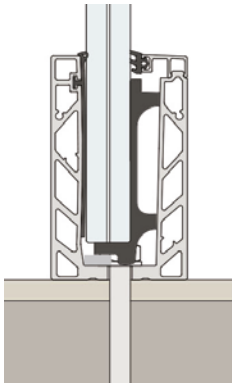

GARDA SP 200

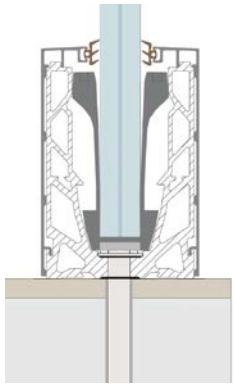

GARDA ONE	GARDA SP 200
Compact profile	Analytical verification by certified technician
Certified laboratory test report	Certified laboratory test report
Glass adjustment inwards and outwards (±15 mm)	Glass adjustment inwards and outwards (±25 mm)
Adjustment and fastening accessories on the inside only	Adjustment and fixing accessories on both sides
LED insertion possible	LED insertion possible
Profile with surface finish and anti-scratch film	Finishing carter to be installed at the end of installation
Profile to be cut to degrees in corners	In the corners, only floor
H floor glass up to 1100 mm	H-glass up to 1200 mm can be cut to degrees
Resistance: design load of 2 kN/m	Resistance: design load of 2 kN/m
Accessory for water drainage GP	Accessory for water drainage GP

LAYING SCHEME

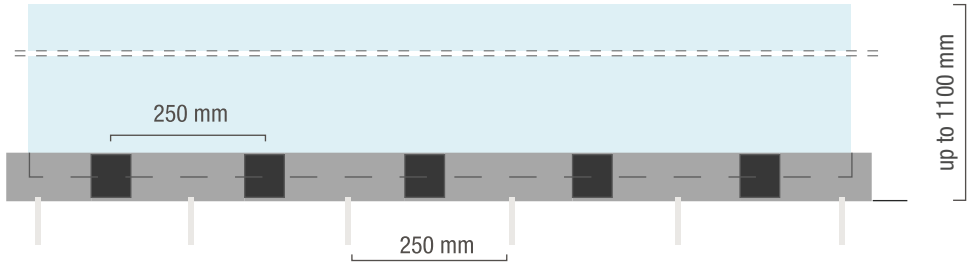

The installation of Garda ONE is simplified thanks to the innovative system that **makes it possible to assemble it safely on all balconies**: the clamping of the clamps and the adjustment are **only to be carried out from the inside**, which benefits construction time

FINISHES

The profiles are supplied protected by **scratch-resistant film**.

ANODISED SILVER
20 micron

PAINTED WHITE
RAL 9010

RAL COLOURS
ON REQUEST

MATERIAL EFFECTS
ON REQUEST

The profiles are supplied as standard with a 20-micron anodised silver finish and are **coated on both sides with a scratch-resistant** protective film that must be removed once the construction site is complete, as they do not require an additional carter for the aesthetic finish. On request, profiles can be supplied with a customised finish in a choice of RAL colours or with special material effects.

GARDA ONE

FIXING **ABOVE FLOOR**

LOAD DESIGNED **200 kg/m**

LOAD ULTIMATE LIMIT STATE **300 kg/m**

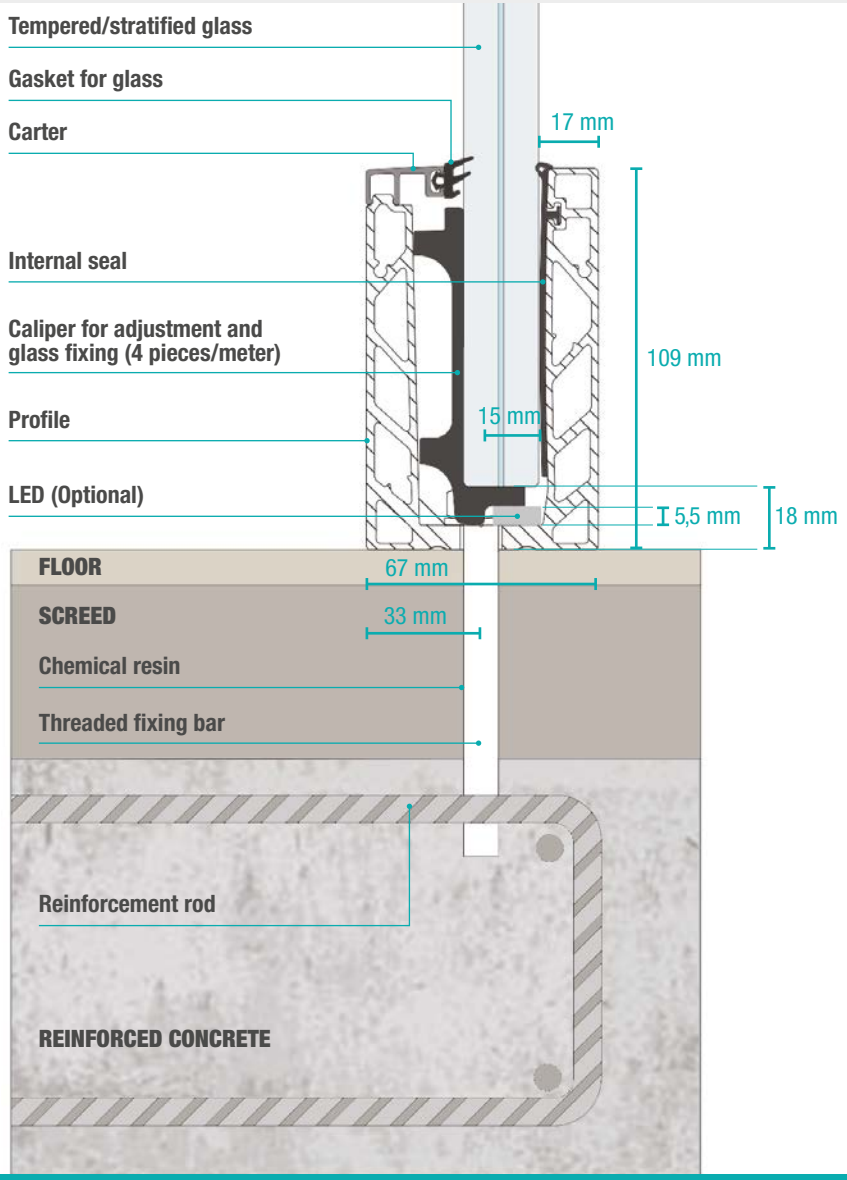

ITEM CODING

[see page 100]

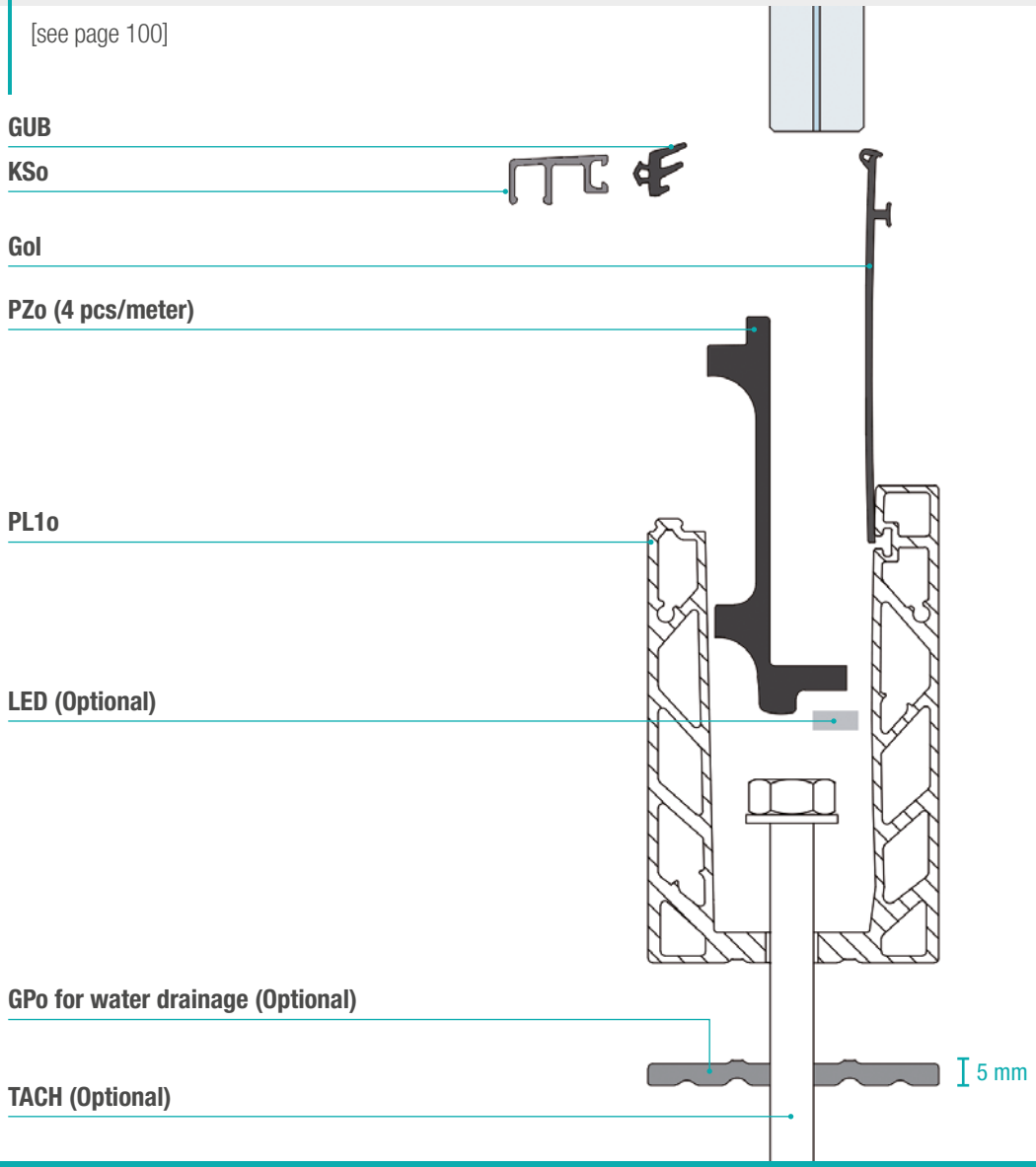

Assembly phases

Scan the QR
and watch
the video of laying

Each profile is ready for installation: the balustrade is completed by fixing screws, seals, carters, clamps. Final adjustment is performed with the aid of a simple Allen key or with the use of a power tool extension, which makes tightening the adjustment screws even quicker.

1 Insert the seal inside the profile, drill the slab with the drill, position the profile and the fixing screws.

2 Place clamps on the inside of the profile every 25 cm and remove the foil from the outside of the profile. Do not place the clamps close to the fixing screws.

3 Insert the glass by tilting it towards the inside. To facilitate insertion of the glass, lubricate with mild soap and water.

4 Adjust the inclination of the glass by means of the screws on the clamps and tighten.

5 Lay the upper carter to which the gasket was previously fitted.

6 Installation completed.

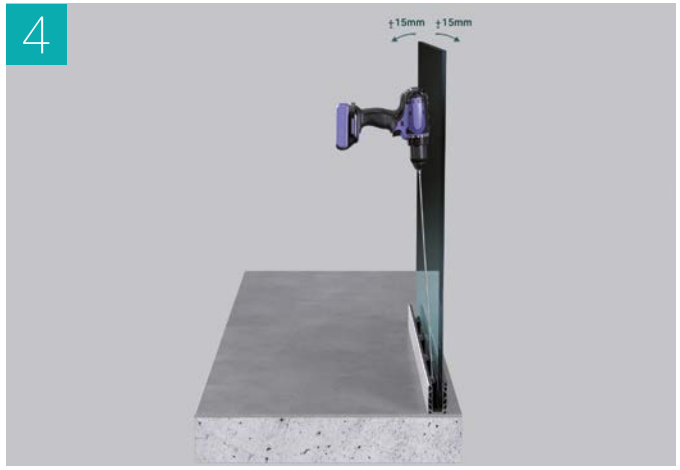

Advantages of System One

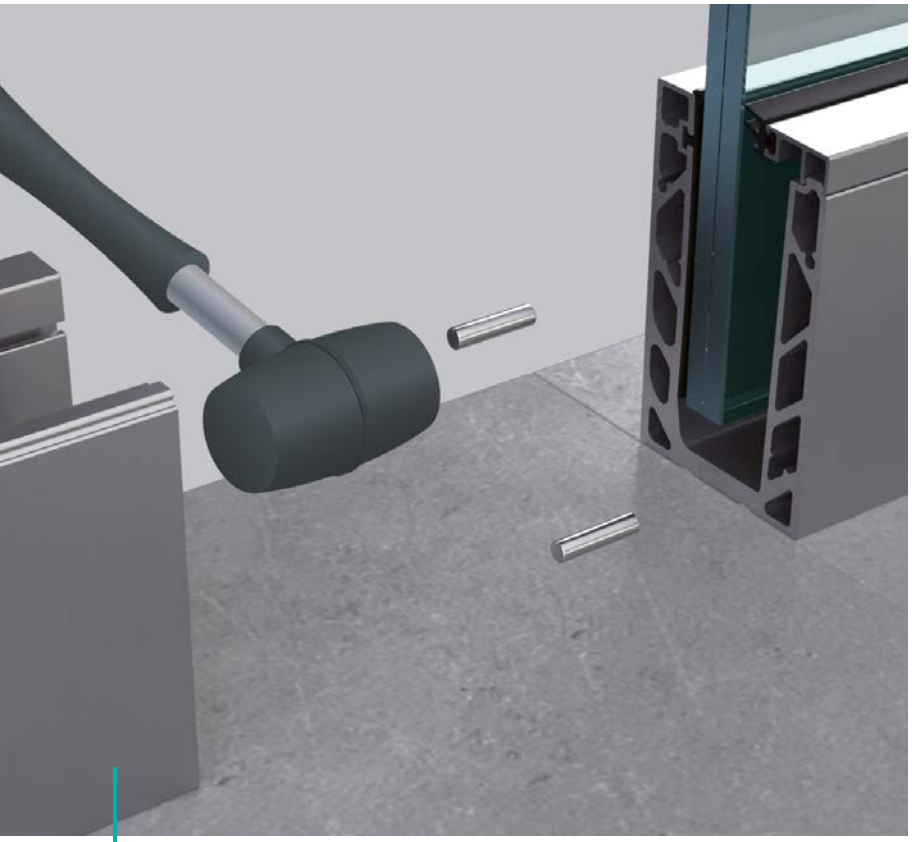

ALIGNMENT PIN

Use alignment dowels when joining two profiles, inserting them into the appropriate slots with the help of a rubber mallet.

FILM

The profiles are supplied with a 20 micron anodised silver finish as standard (therefore suitable for exposure to aggressive urban or marine atmospheres) and coated with scratch-resistant protective film on both sides, to be removed after completion of the construction site.

INTERNAL ADJUSTMENT CLAMP

The clamps are adjusted and tightened from the inside only, for quick and effective installation, in total safety.

GARDA SP

FIXING **ABOVE FLOOR**

GARDA SP 200 / GARDA SP 300

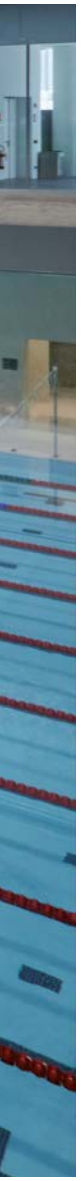

Glass tilt adjustment **± 20 mm**

USABLE GLASS THICKNESS (mm)

8 + 8 + 0,76
8 + 8 + 1,52
10 + 10 + 0,76
10 + 10 + 1,52
12 + 12 + 0,76
12 + 12 + 1,52

Glass type on page 14

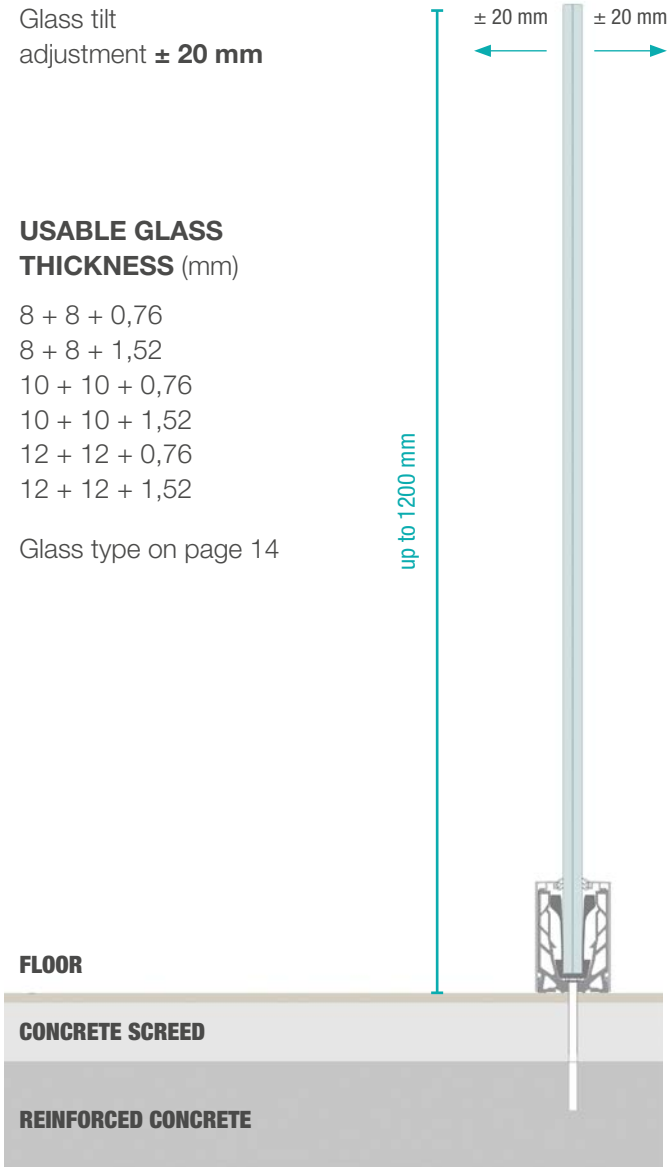

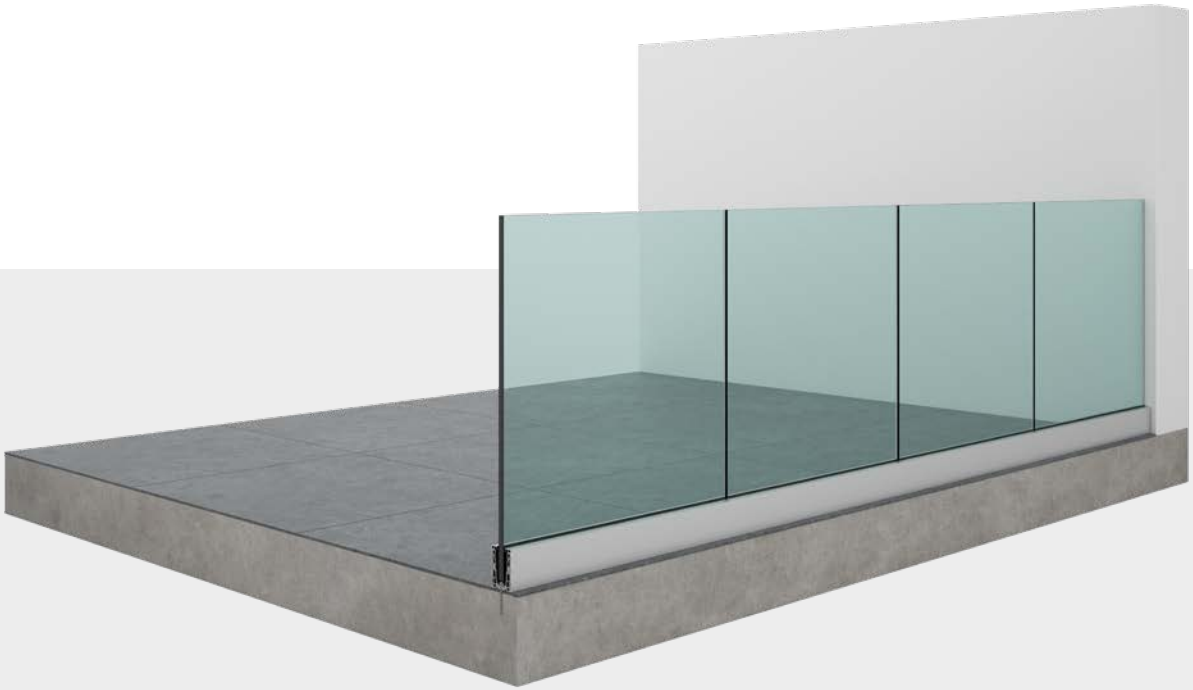

The balustrade that remains in view

Extruded aluminium profile. It can mount different thicknesses of laminated and tempered glass.

GARDA SP 200

FIXING **ABOVE FLOOR**

LOAD DESIGNED
200 kg/m

LOAD ULTIMATE LIMIT STATE
300 kg/m

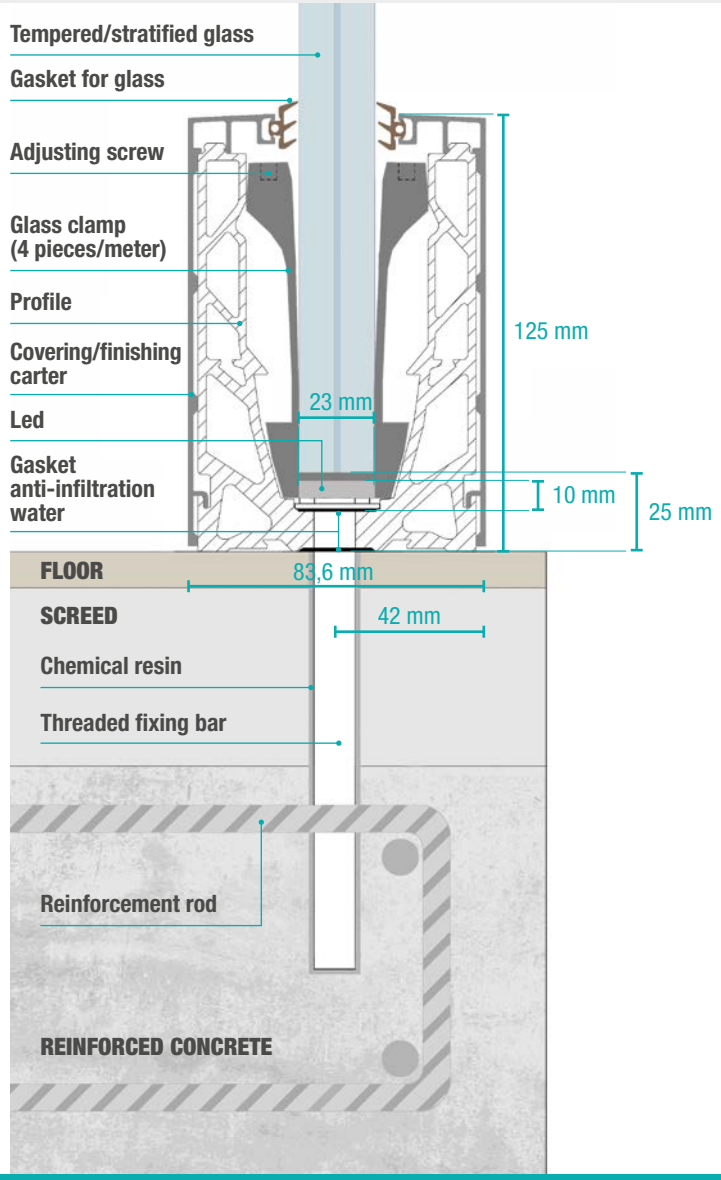

ITEM CODING

[see page 101]

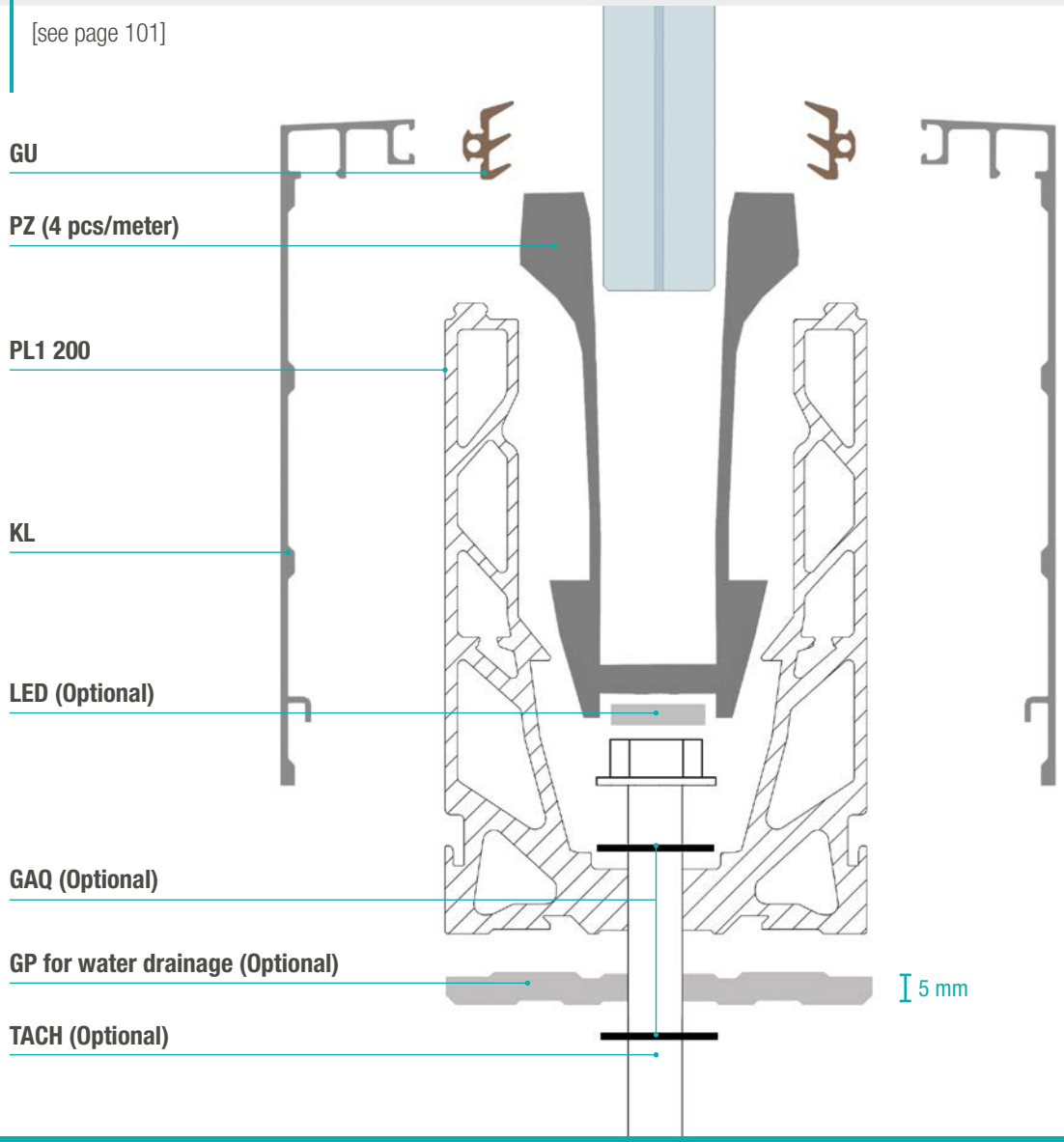

GARDA SP 300

FIXING **ABOVE FLOOR**

LOAD DESIGNED **300 kg/m**

LOAD ULTIMATE LIMIT STATE **450 kg/m**

IDEAL FOR **STADIUMS** AND **SPORTS CENTRES**

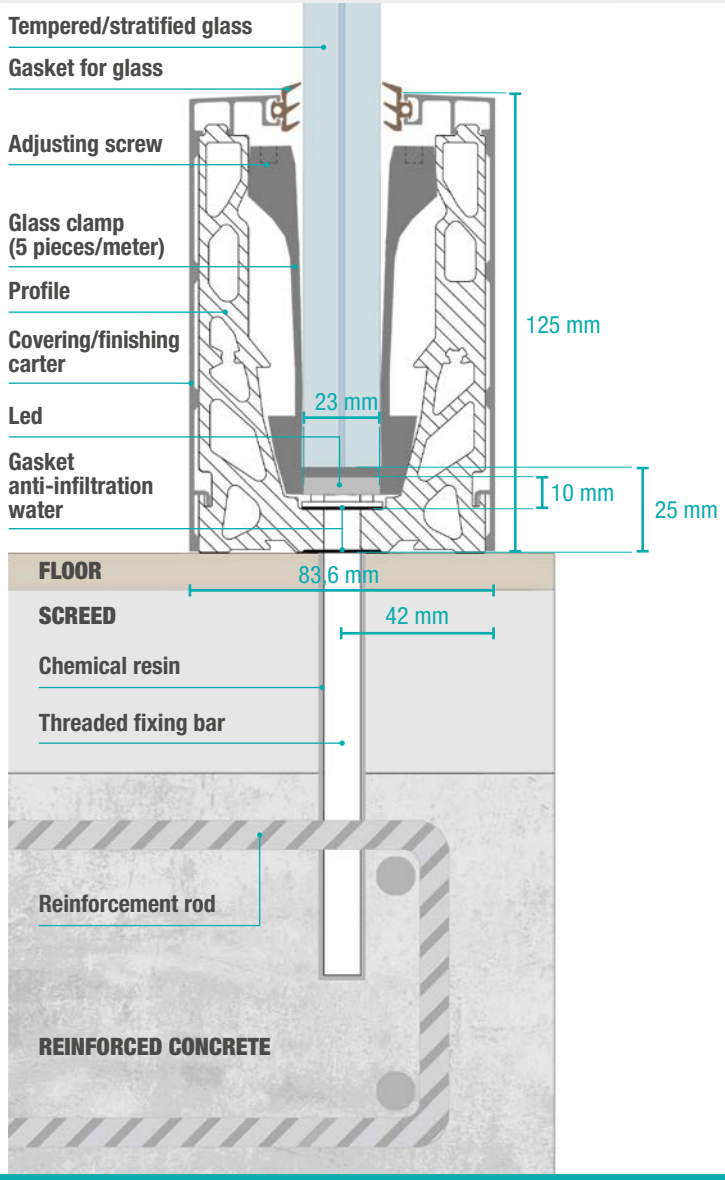

ITEM CODING

[see page 102]

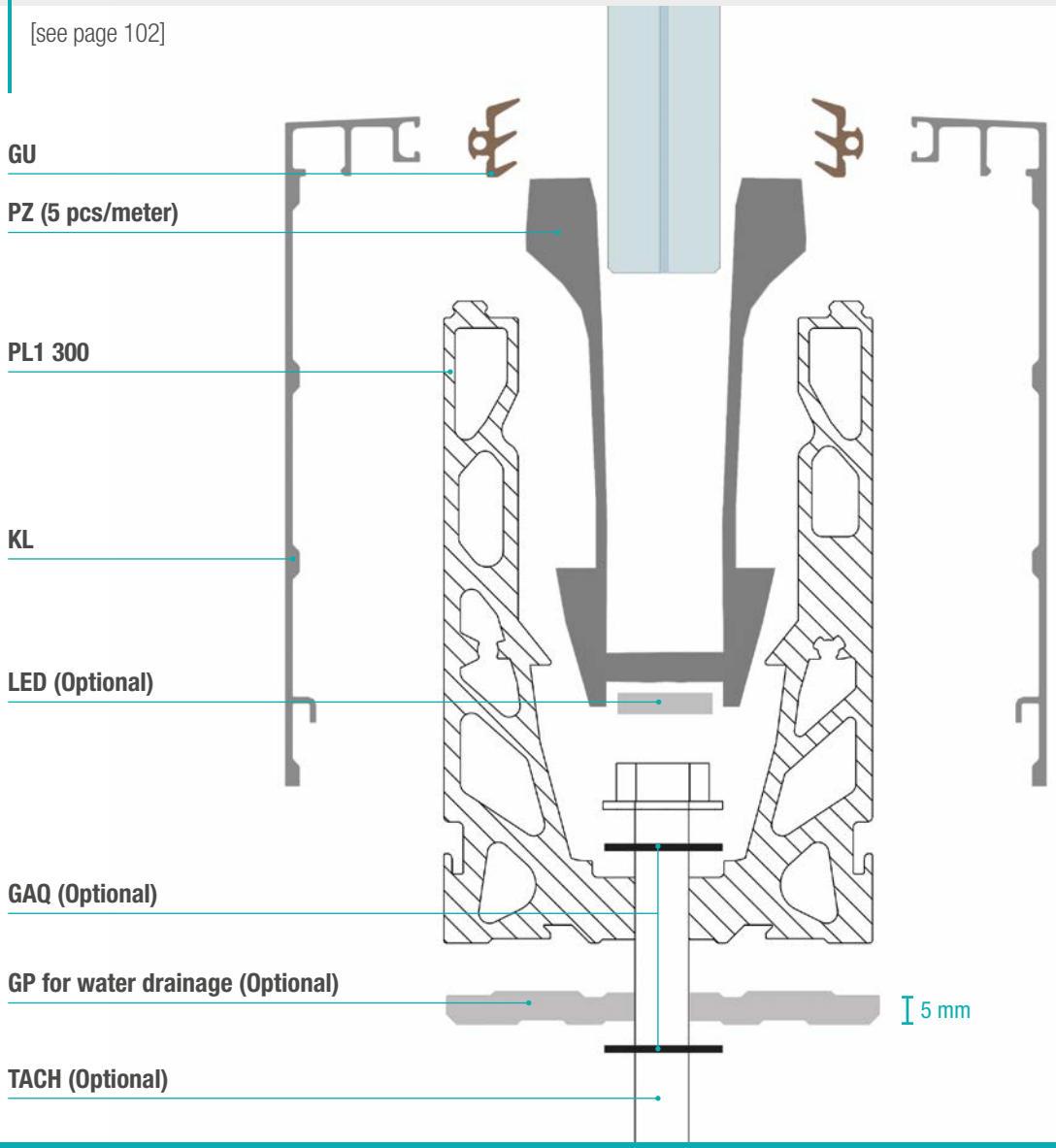

GARDA SP 200 SPECIAL

FIXING **ABOVE FLOOR**

LOAD DESIGNED **200 kg/m**

LOAD ULTIMATE LIMIT STATE **300 kg/m**

IDEAL IN ALL CASES WHERE LAYING THE PROFILE FLUSH WITH THE SLAB IS REQUIRED

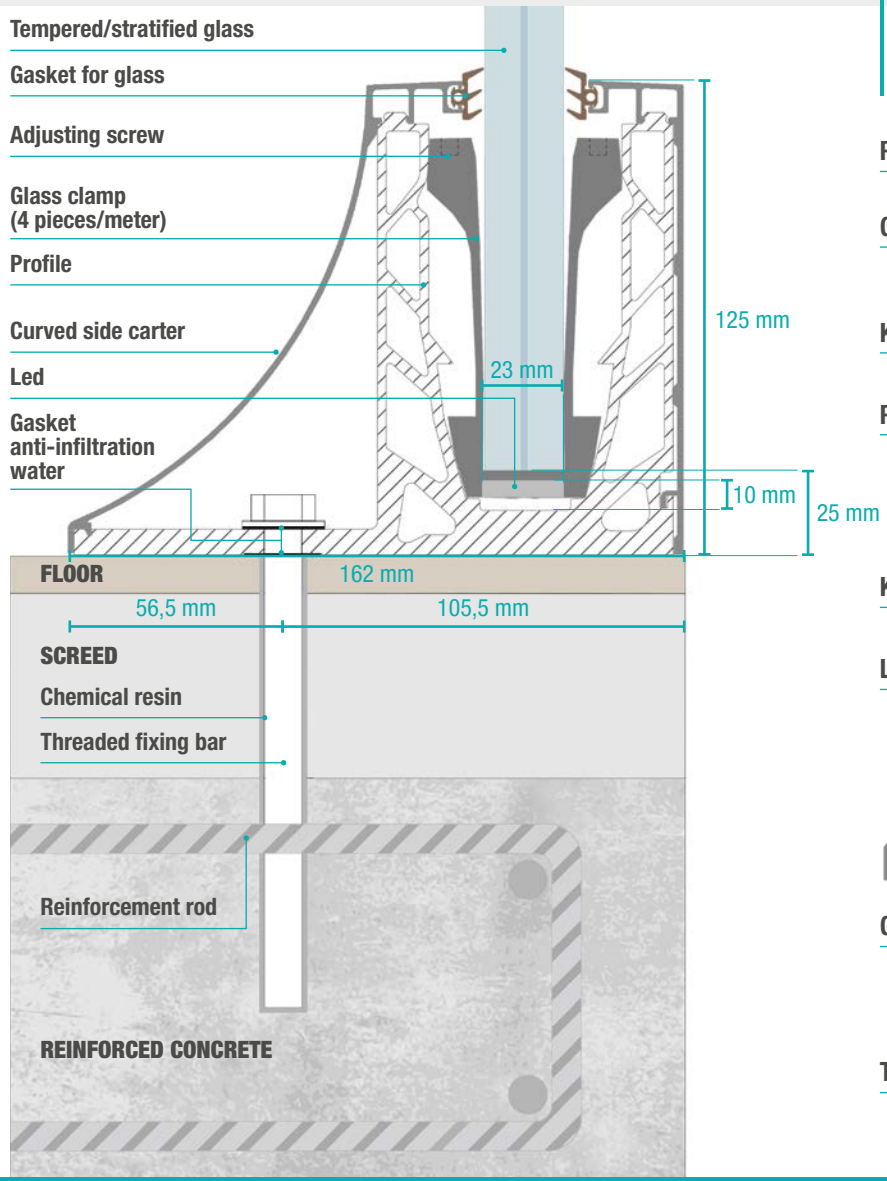

ITEM CODING

[see page 104]

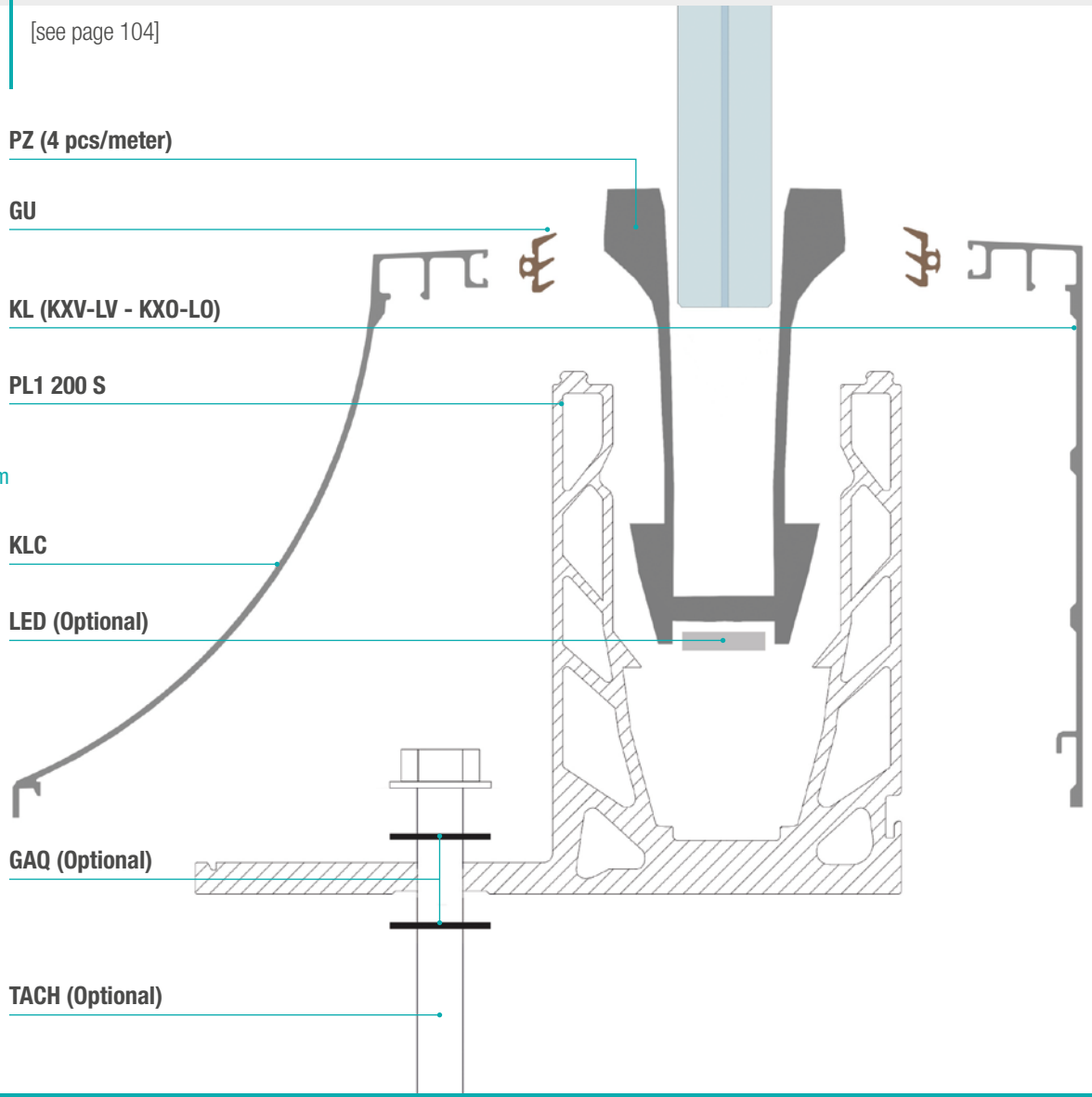

ALLIANZ CLOUD (EX PALALIDO) - MILANO

Assembly phases

Scan the QR
and watch
the video of laying

Each profile is ready for installation: the balustrade is completed by fixing screws, seals, carters, clamps. Final adjustment is performed with the aid of a simple Allen key or with the use of a power tool extension, which makes tightening the adjustment screws even quicker.

1 Drill the slab with the drill, position the profile and the fixing screws.

2 Place clamps inside the profile every 25 cm. Do not place the clamps at the fixing screws.

3 Insert glass.

4 Adjust the inclination of the glass by means of the screws on the clamps and tighten.

5 Lay the carters to which the gasket was previously fitted.

6 Installation completed.

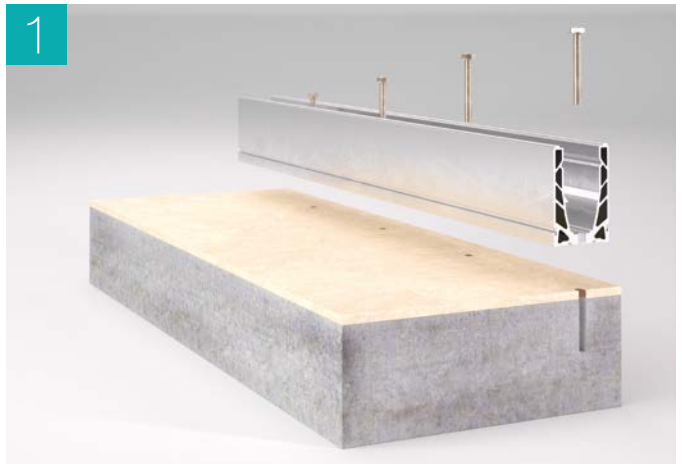

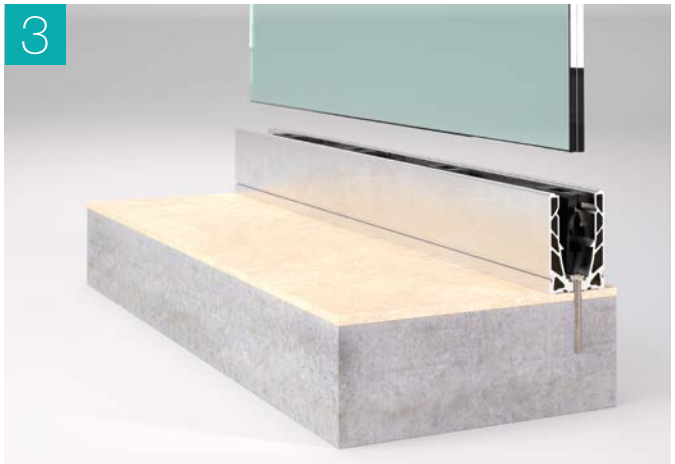

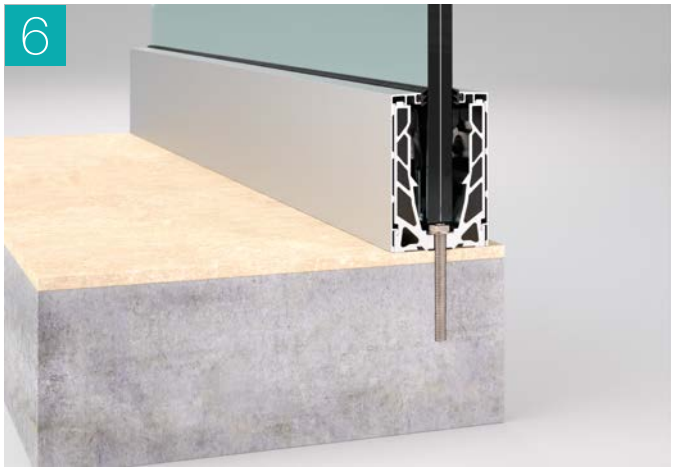

Stratigraphy

SOME CASES OF USE

1 Profile fixed on reinforced concrete slab, fastening within the reinforcement.

2 Profile fixed on a structural work beam, finish of the curtain wall cladding made with a vertical sheet through the use of the carter special.

3 Profile fixed on reinforced concrete slab. Floating floor and finishing of the plasterboard façade cladding with the help of the carter special.

4 Set back fixing using the special profile, which allows installation flush with the floor.

GARDA AP

FLOOR EMBEDDED FASTENING

WATER CENTRAL - MILAN
DESIGNER: **FUD - DEGW I LOMBARDINI22**
PHOTOGRAPHER: **STUDIO TETTAMANZI**

GARDA AP 200 / GARDA AP 300

Glass tilt adjustment **± 20 mm**

USABLE GLASS THICKNESS (mm)

8 + 8 + 0,76
8 + 8 + 1,52
10 + 10 + 0,76
10 + 10 + 1,52
12 + 12 + 0,76
12 + 12 + 1,52

Glass type on page 14

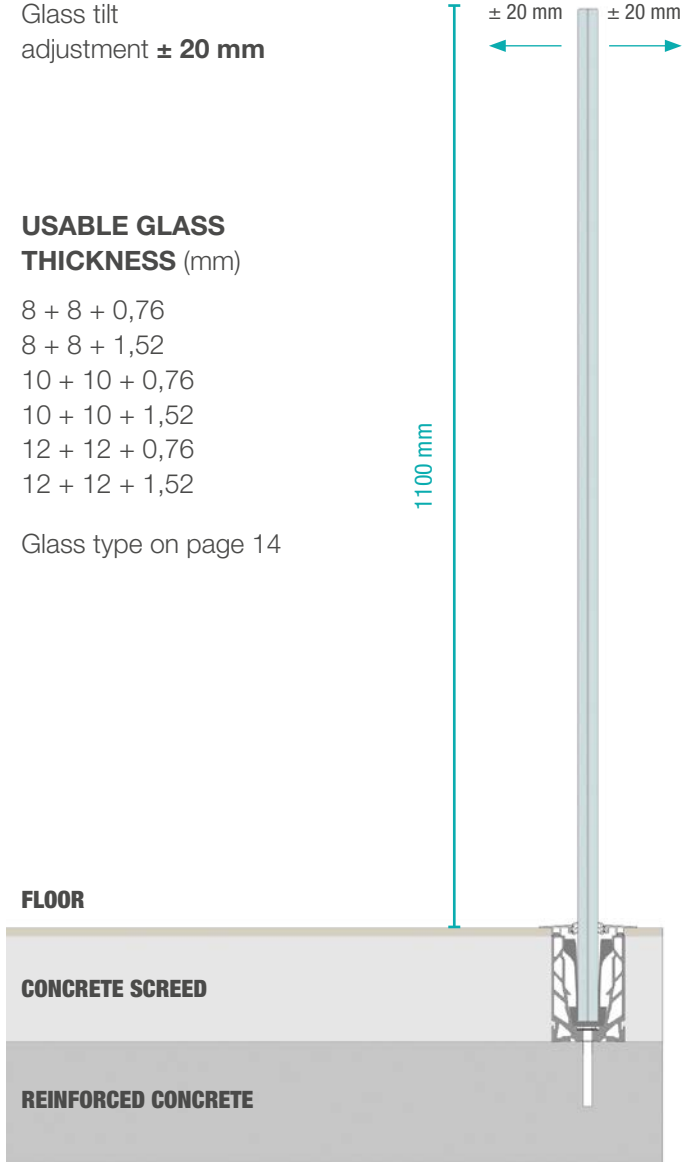

The choice for minimalist design

It is the minimalist version of the balustrade system, offering maximum transparency and simplicity, thanks to an elegant and essential design.

GARDA AP 200

FLOOR EMBEDDED FASTENING

LOAD DESIGNED
200 kg/m

LOAD ULTIMATE LIMIT STATE
300 kg/m

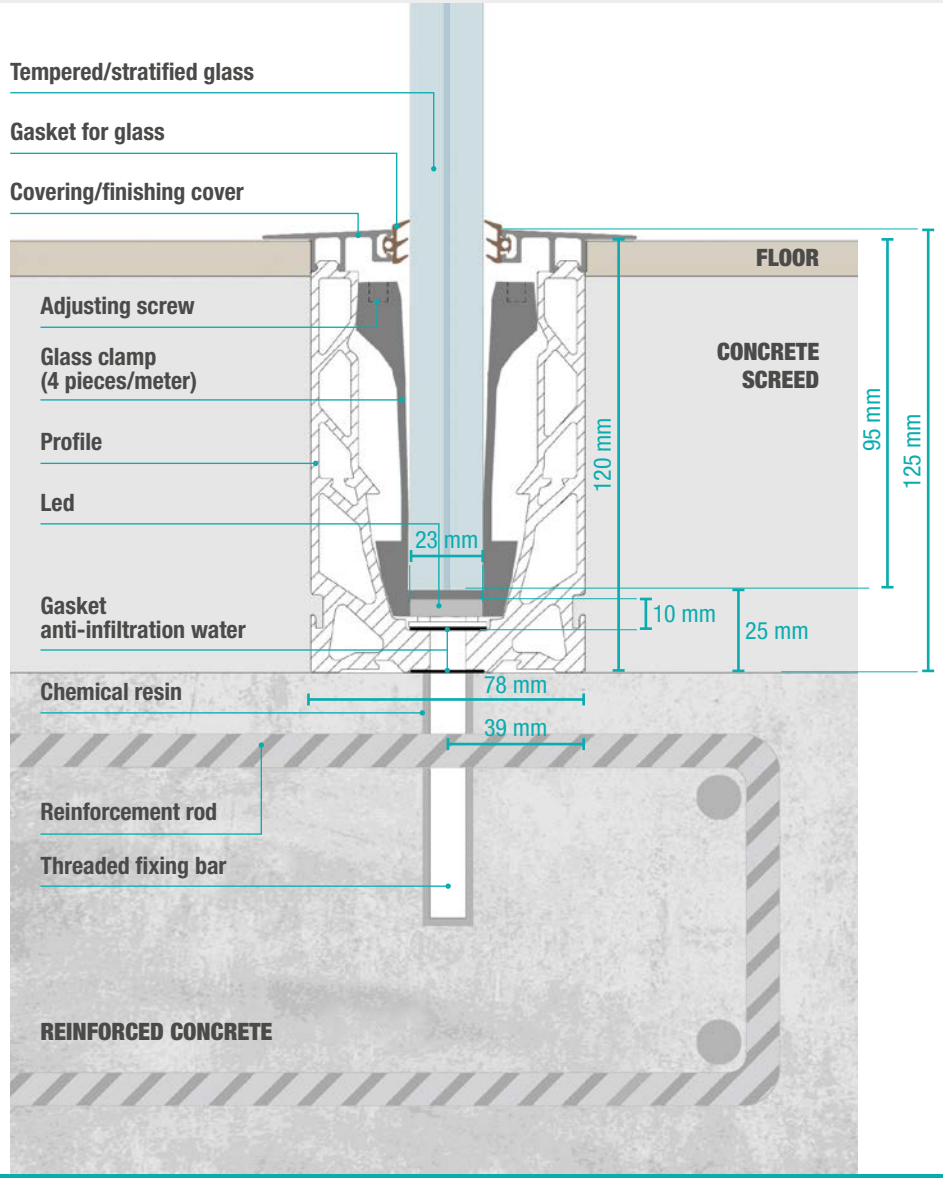

ITEM CODING

[see page 105]

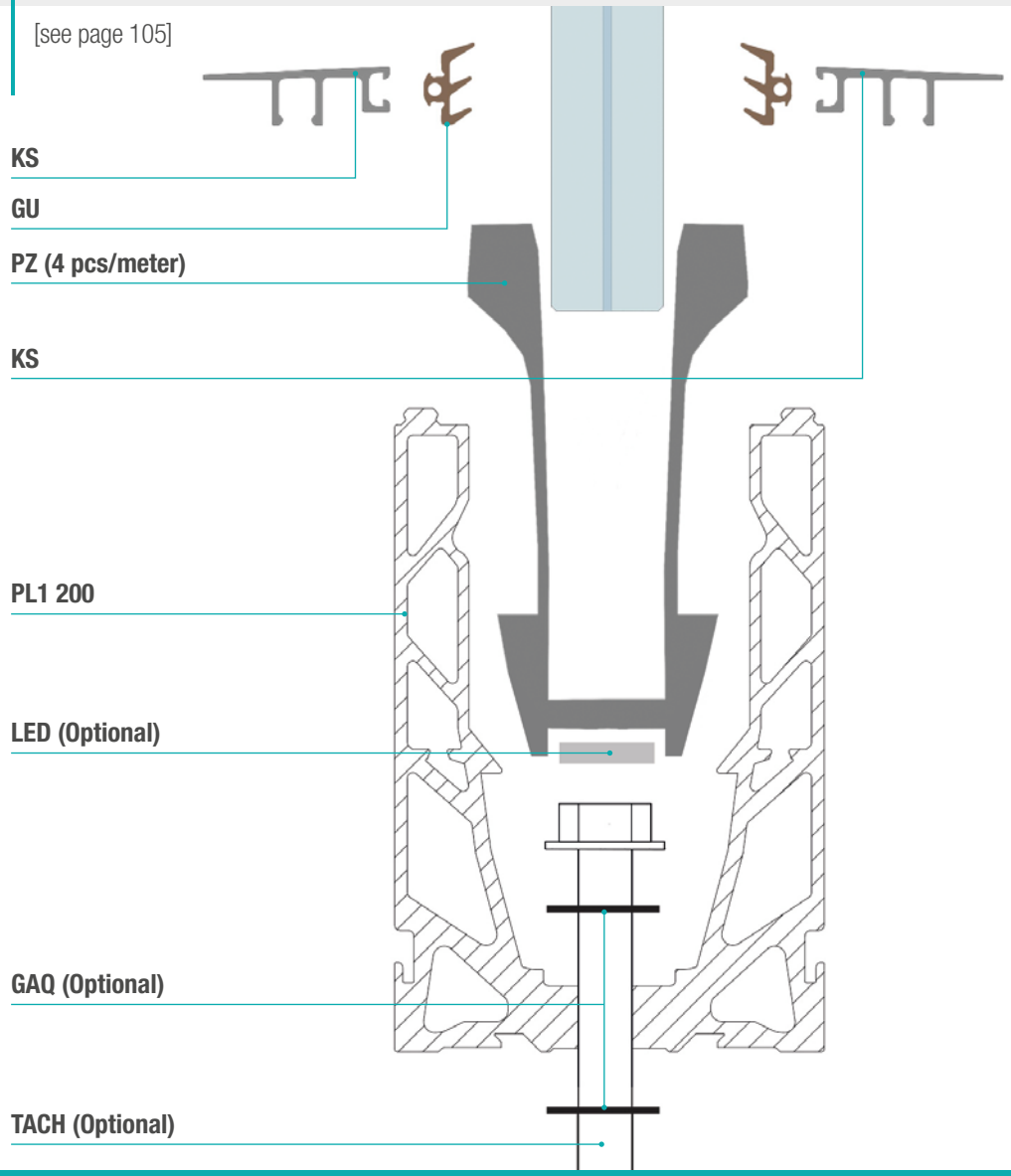

GARDA AP 300

FLOOR EMBEDDED FASTENING

IDEAL FOR **STADIUMS** AND **SPORTS CENTRES**

LOAD DESIGNED **300 kg/m**

LOAD ULTIMATE LIMIT STATE **450 kg/m**

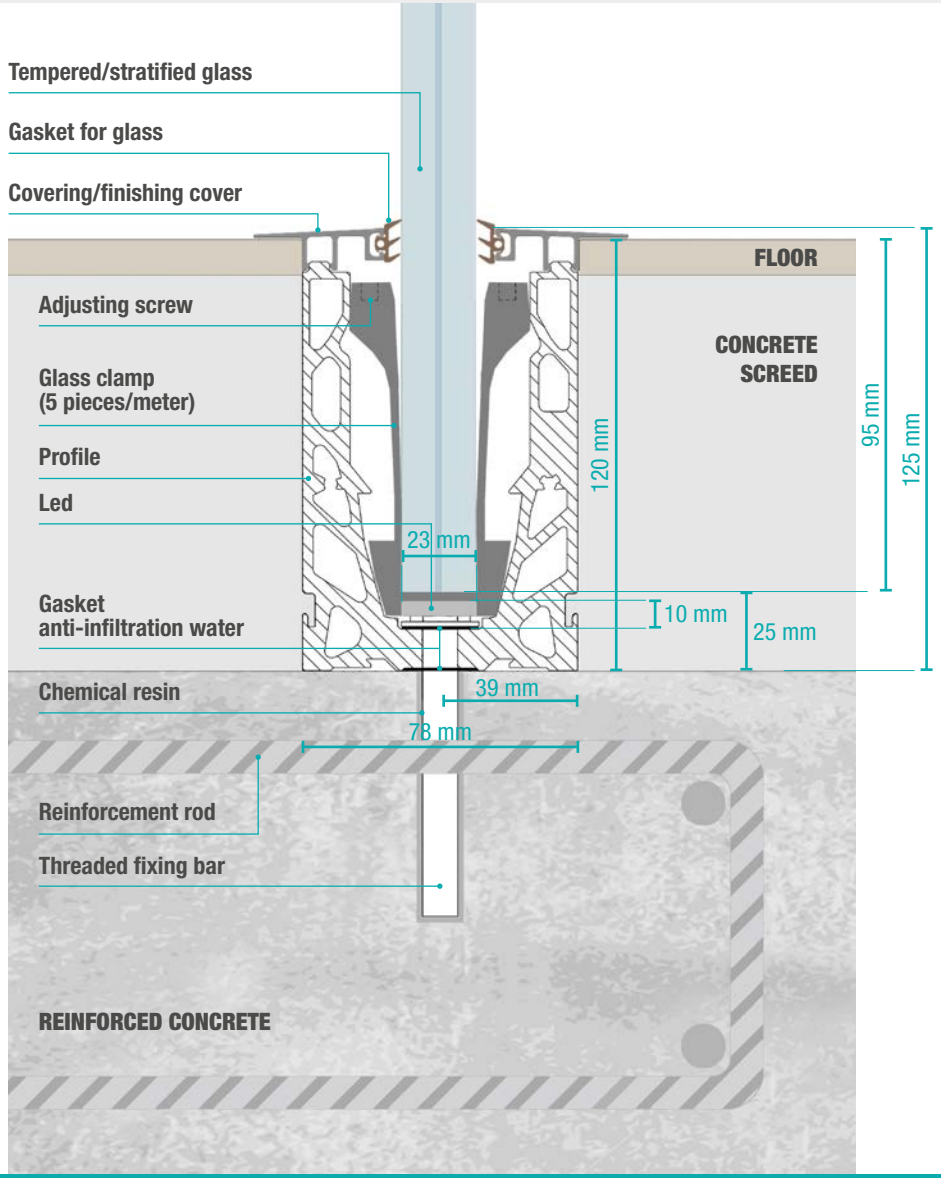

ITEM CODING

[see page 106]

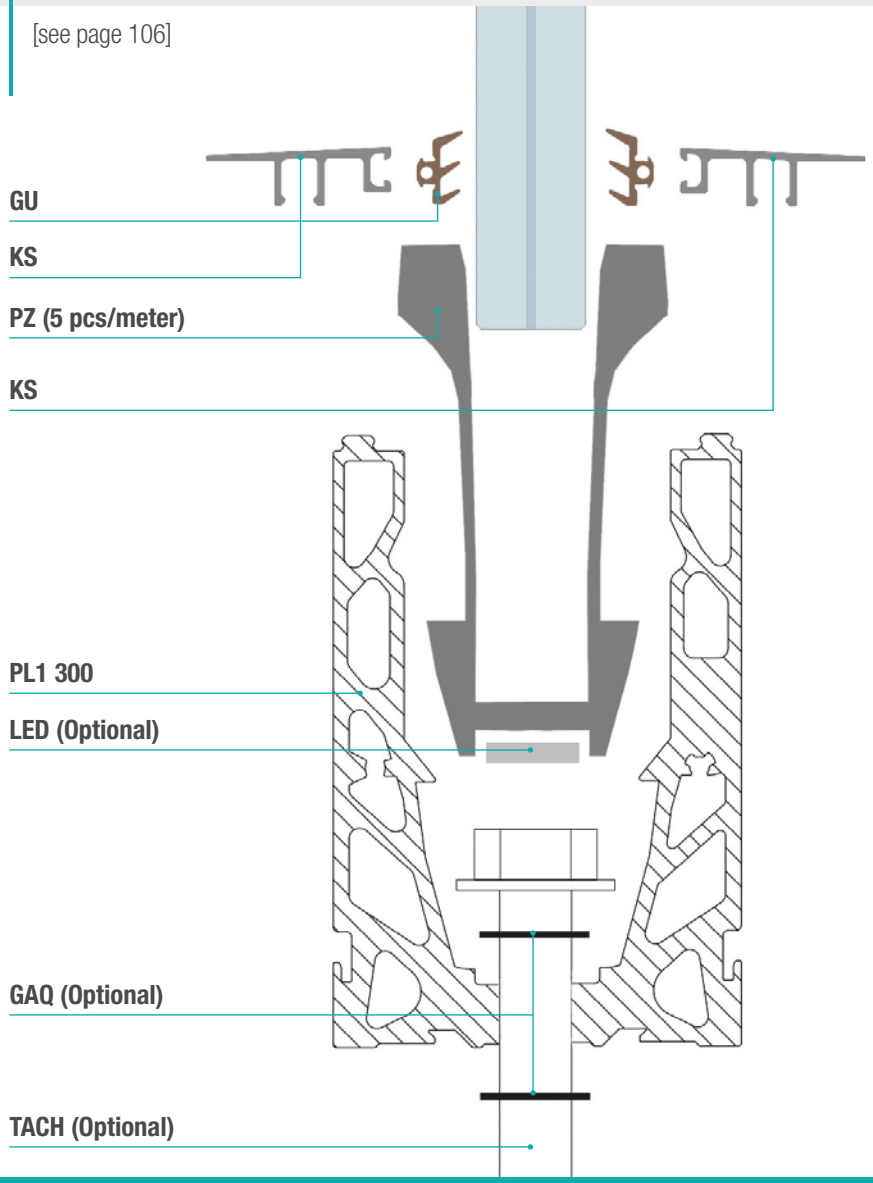

GARDA AP 200 SPECIAL

FLOOR EMBEDDED FASTENING

LOAD DESIGNED **200 kg/m**

LOAD ULTIMATE LIMIT STATE **300 kg/m**

IDEAL IN ALL CASES WHERE LAYING THE PROFILE FLUSH WITH THE SLAB IS REQUIRED

ITEM CODING

[see page 107]

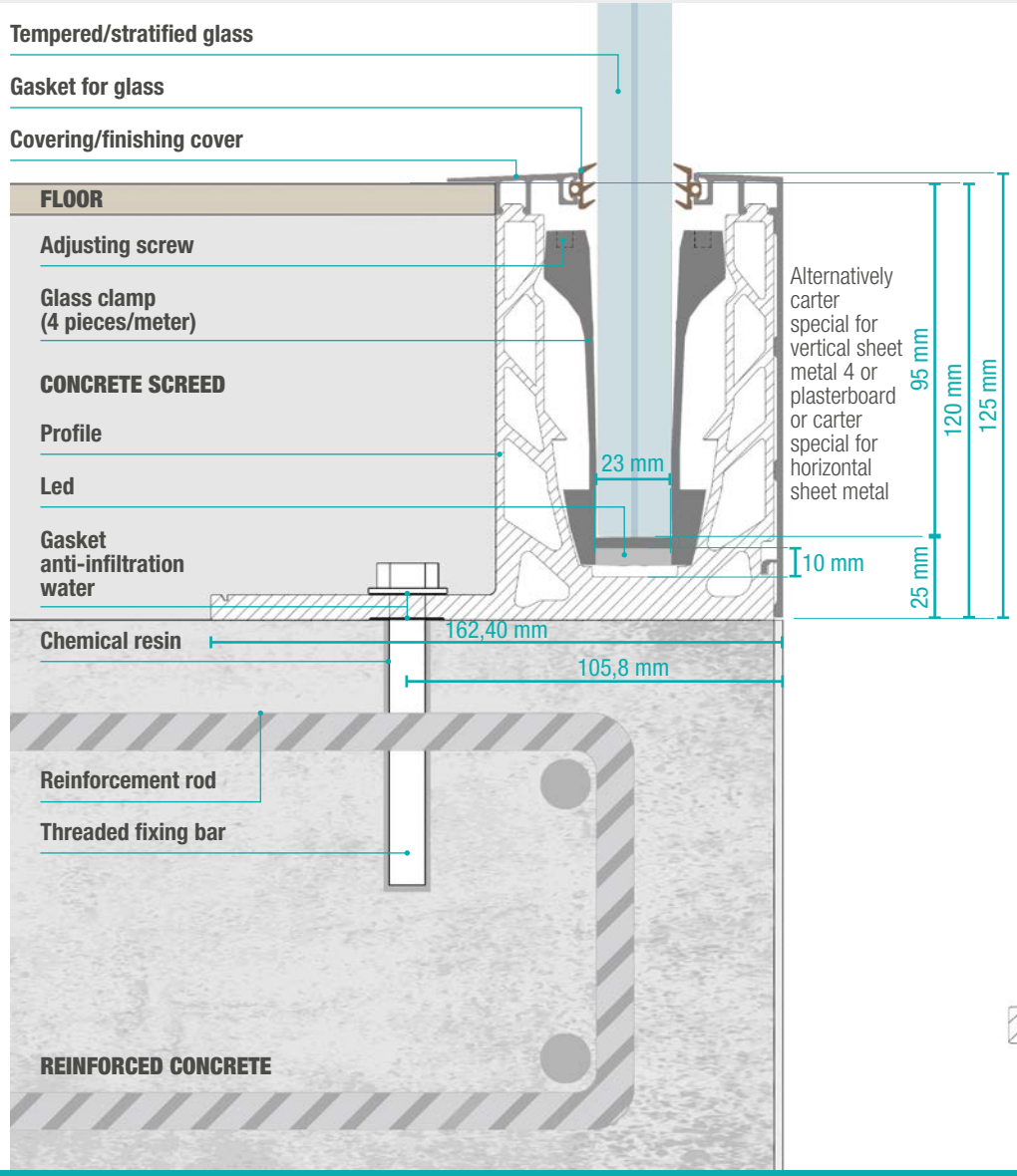

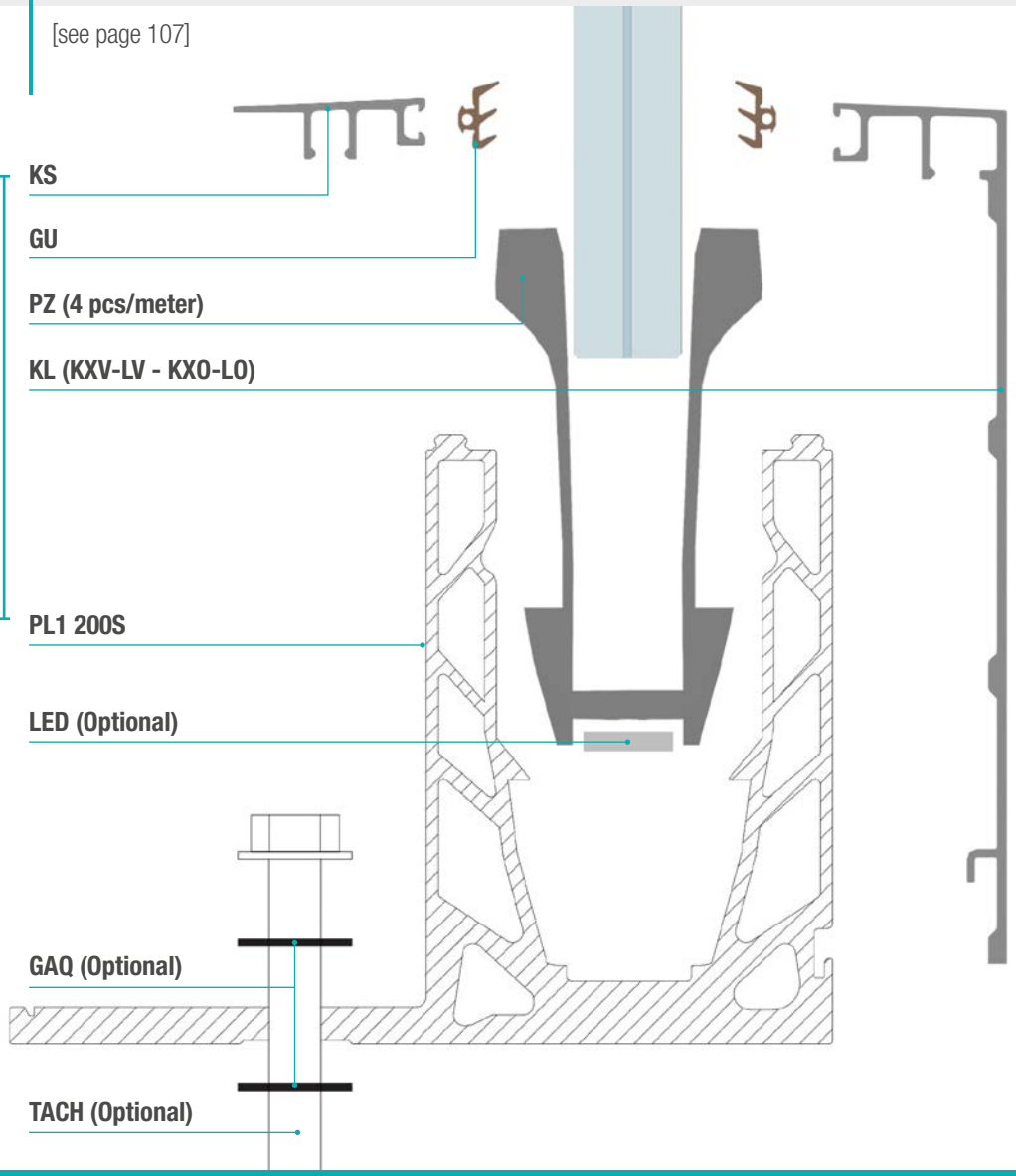

Assembly phases

Each profile is ready for installation: the balustrade is completed by fixing screws, seals, carters, clamps. Final adjustment is performed with the aid of a simple Allen key or with the use of a power tool extension, which makes tightening the adjustment screws even quicker.

1 Drill the slab with the drill, position the profile, the fixing screws and the temporary cover to prevent aggregates from soiling the profile during construction.

4 Adjust the inclination of the glass by means of the screws on the clamps and tighten.

2 Lift up the temporary cover to start laying the accessories.

5 Insert the gaskets on the finishing carter and place the carter on the profile.

3 Place clamps inside the profile every 25 cm. Do not place the clamps at the fixing screws and insert the glass.

6 Installation completed.

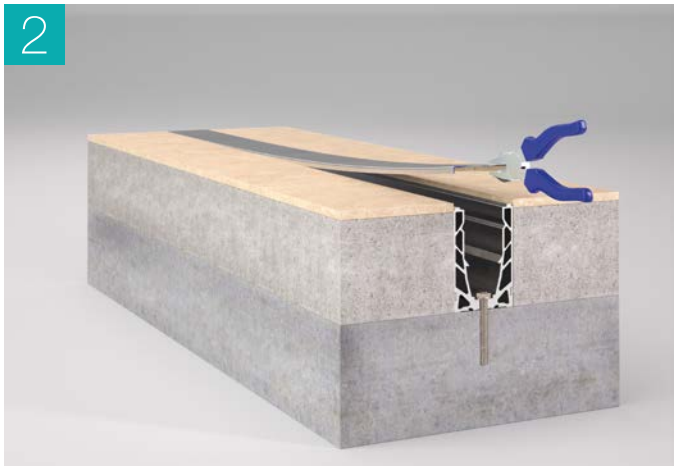

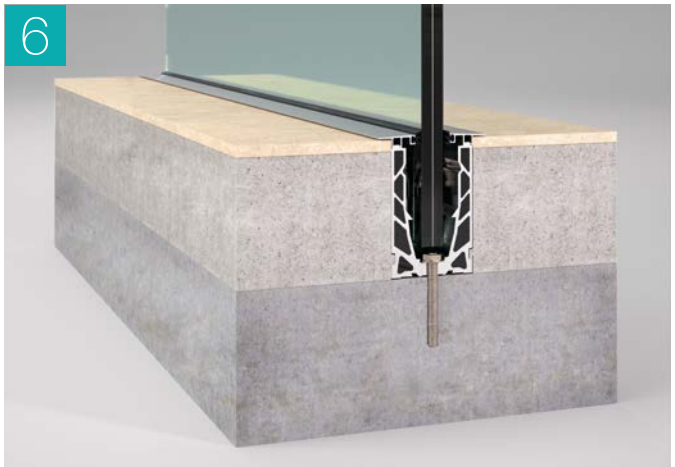

Stratigraphy

SOME CASES OF USE

1 Profile fastened on reinforced concrete slab, concealed, fastening within reinforcement. Finished with composite panel and special carter.

2 Profile fixed on a beam raised above the floor level, finish of the façade cladding made with a sheet metal through the use of the special carter.

3 Profile fixed on reinforced concrete slab. Floating floor and finishing of the sheet metal façade cladding with the help of the carter special.

4 Set back fixing using the special profile, which allows installation flush with the floor. Covering the fixings with bituminous sheathing. Finishing the curtain wall cladding with gypsum plasterboard through the use of carter special.

1

2

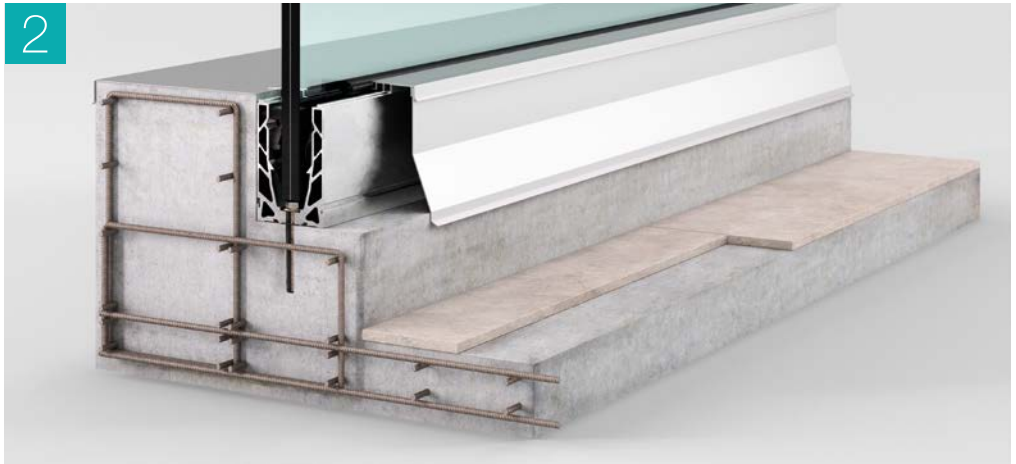

3

4

GARDA FS

SLAB-FRONT FASTENING

SWISS
SIA 261
ÖNORM B 3716

ISTITUTO
GIORDANO

ABP
TEST

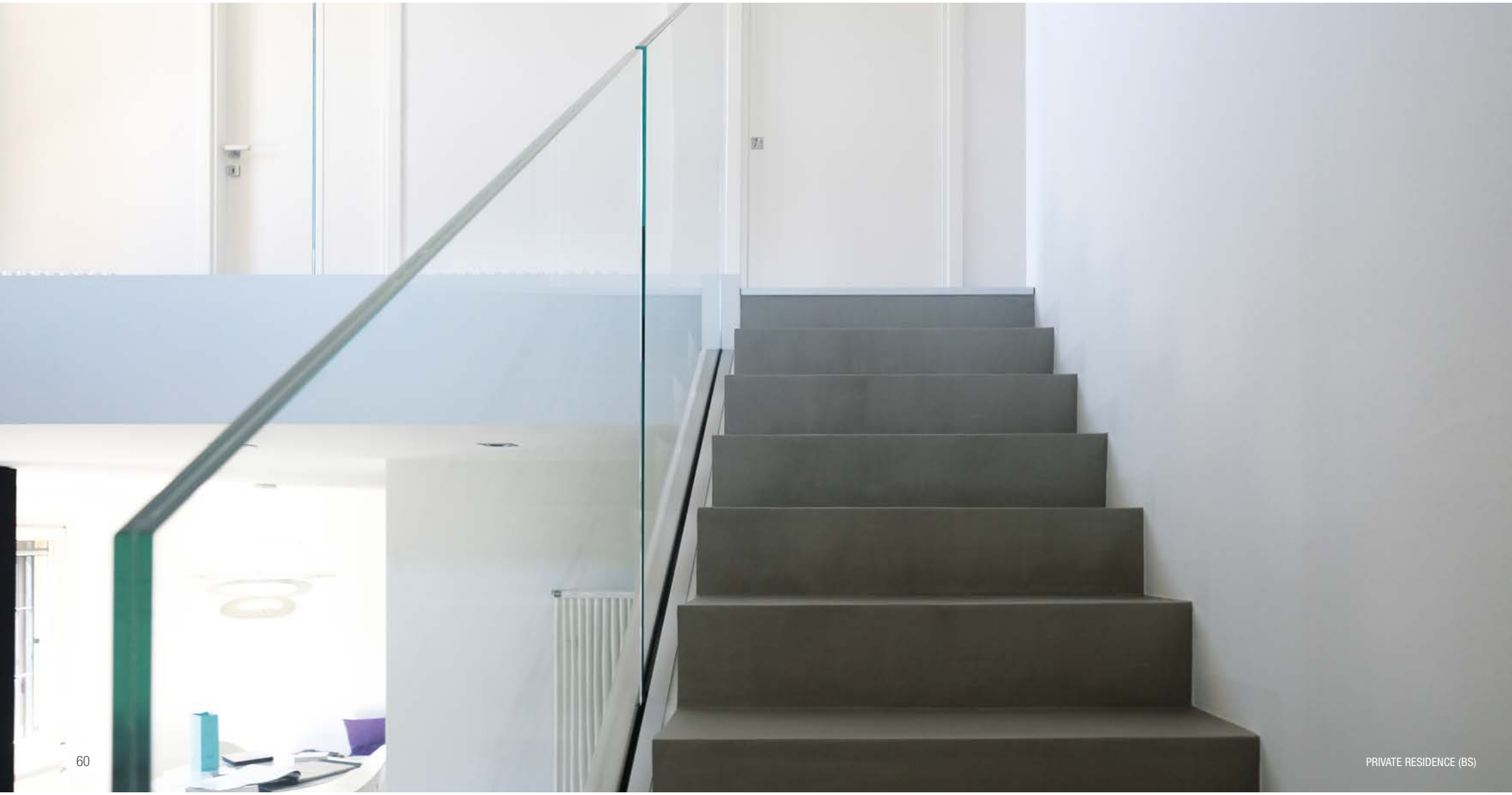

PRIVATE RESIDENCE (BS)

GARDA FS 200 / GARDA FS 300

Glass tilt adjustment **± 20 mm**

USABLE GLASS THICKNESS (mm)

8 + 8 + 0,76
8 + 8 + 1,52
10 + 10 + 0,76
10 + 10 + 1,52
12 + 12 + 0,76
12 + 12 + 1,52

Glass type on page 14

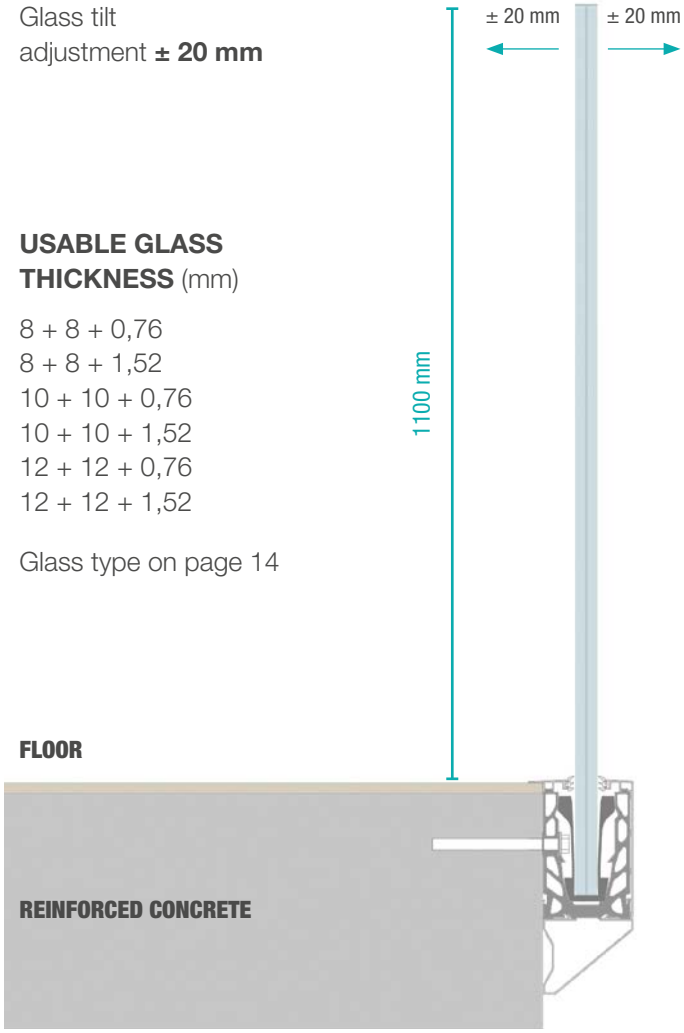

Make the most of every terrace

The solution for ensuring the maximum walkable surface area of outdoor spaces such as balconies and terraces.

GARDA FS 200

SLAB-FRONT FASTENING

LOAD DESIGNED
200 kg/m

LOAD ULTIMATE LIMIT STATE
300 kg/m

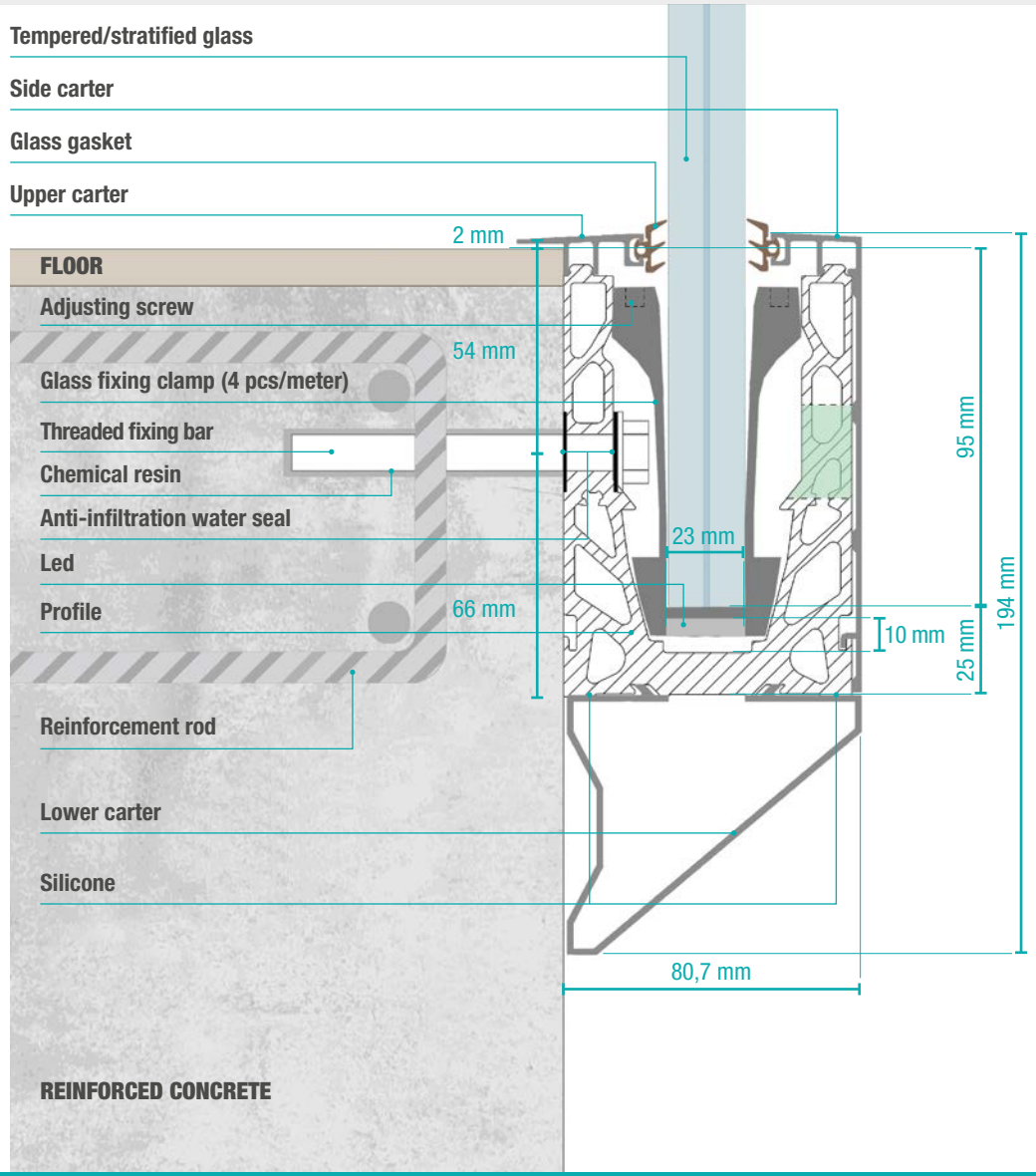

ITEM CODING

[see page 109]

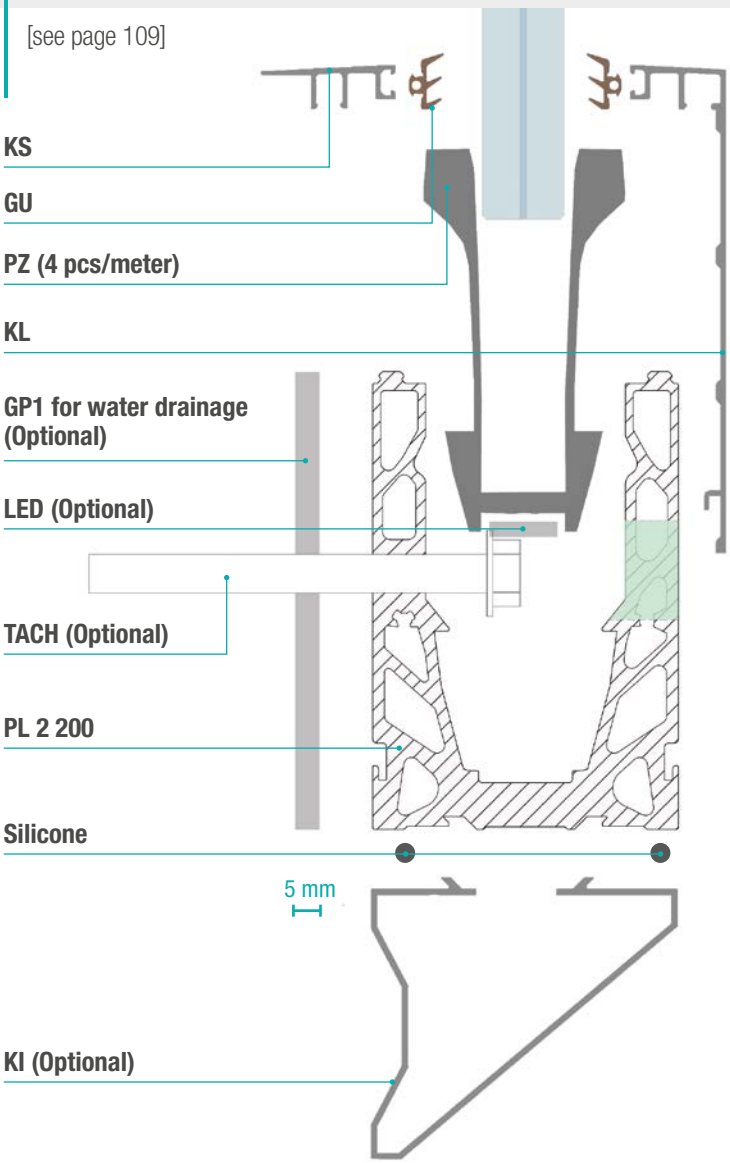

GARDA FS 200 SPECIAL

SLAB-FRONT FASTENING

IDEAL FOR SLABS WITH SCREED

LOAD DESIGNED **200 kg/m**

LOAD ULTIMATE LIMIT STATE **300 kg/m**

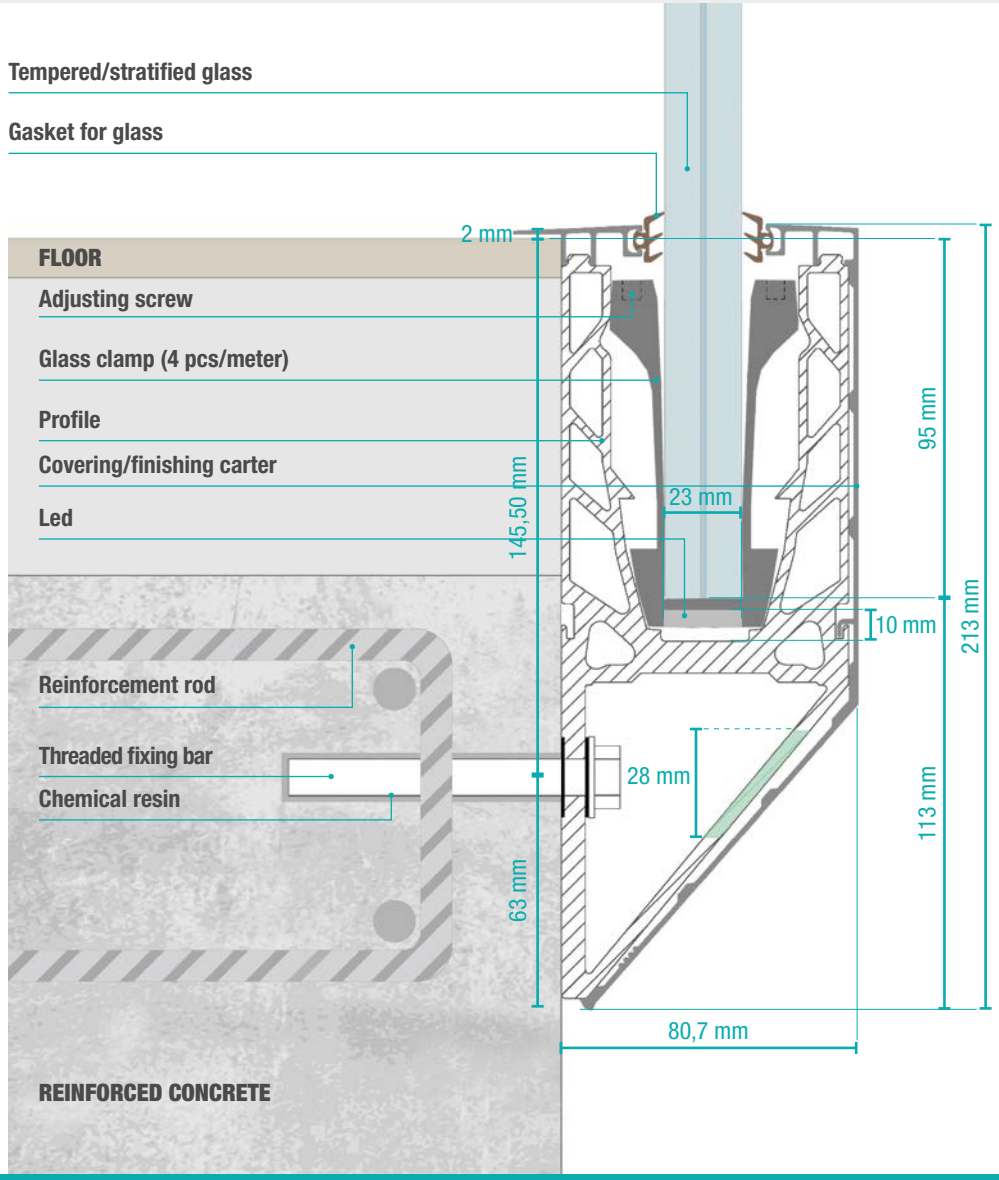

ITEM CODING

[see page 111]

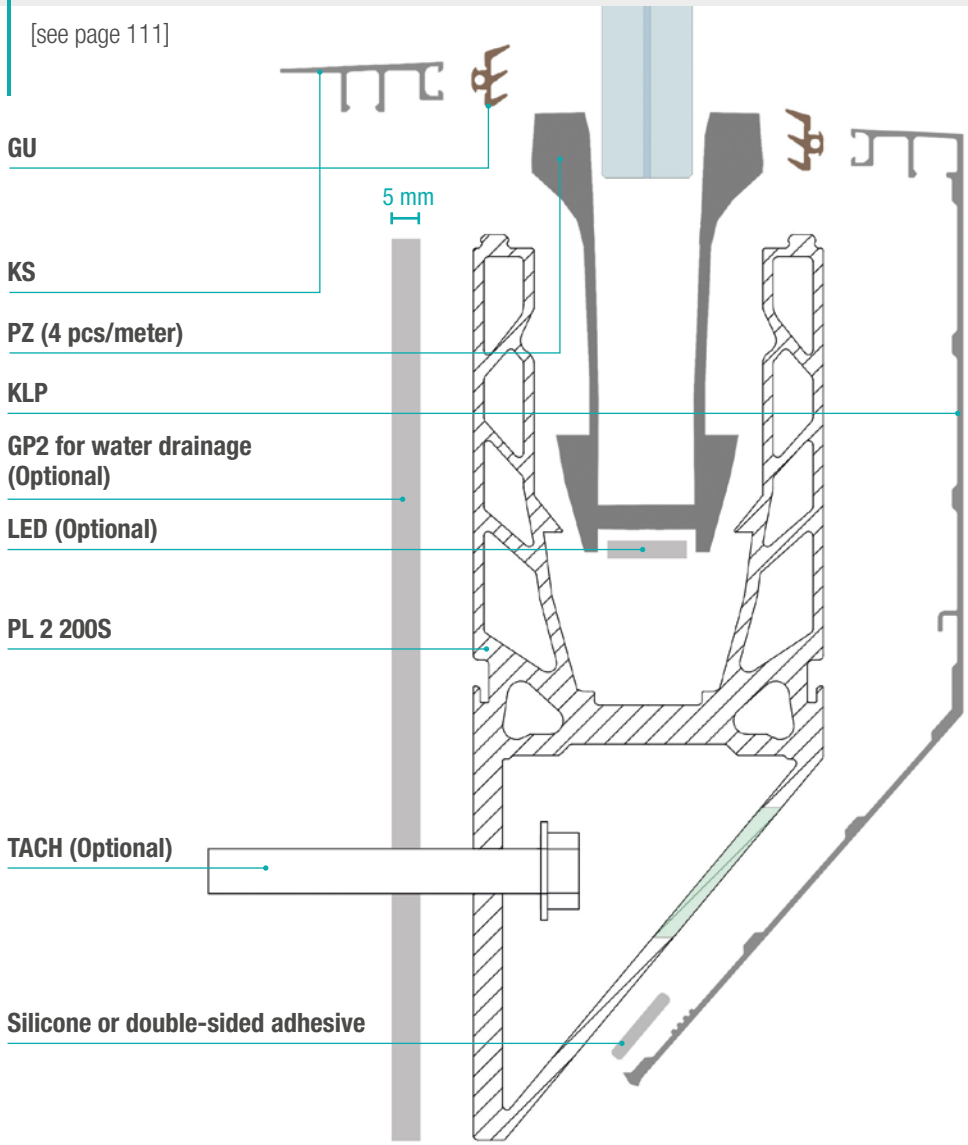

GARDA FS 300 flat reinforcement

SLAB-FRONT FASTENING

IDEAL FOR **STADIUMS** AND **SPORTS CENTRES**

LOAD DESIGNED **300 kg/m**

LOAD ULTIMATE LIMIT STATE **450 kg/m**

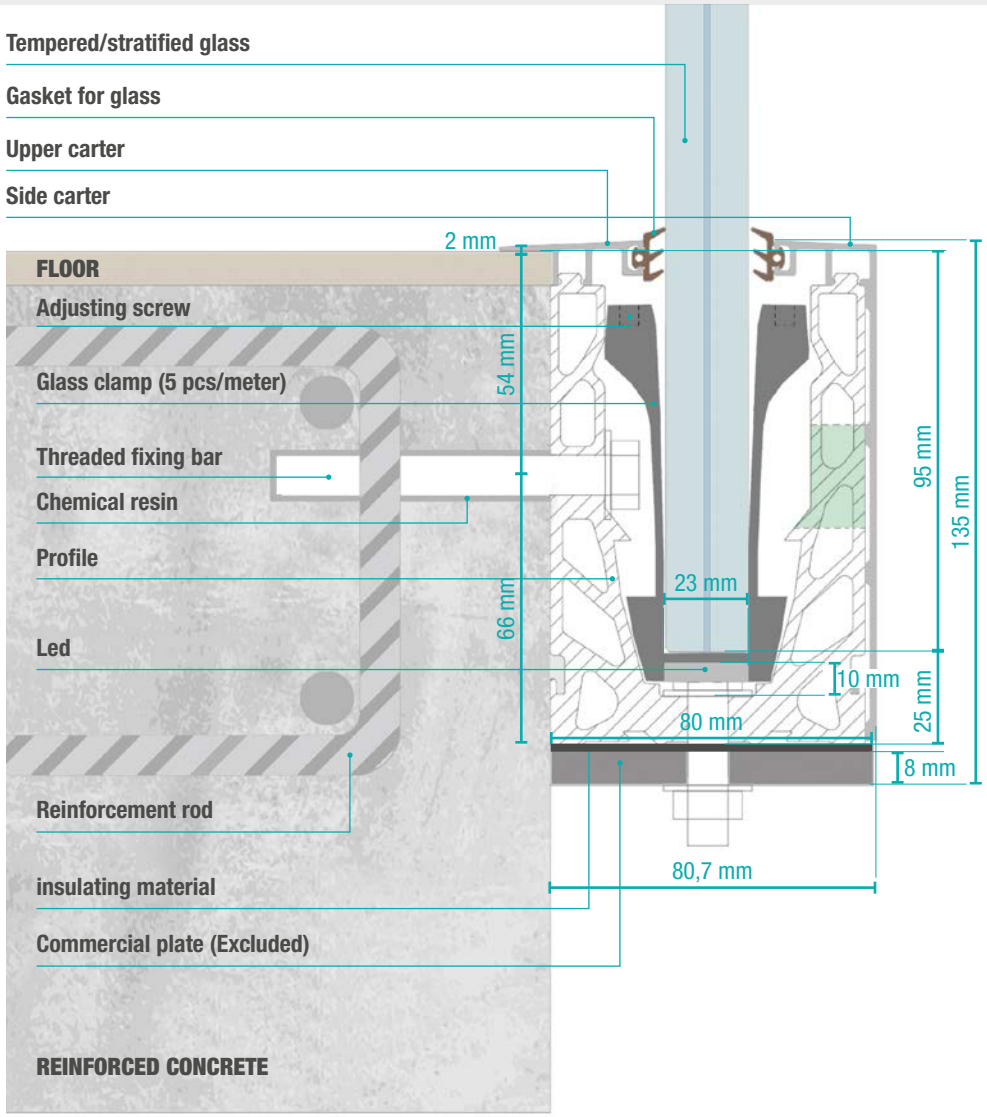

ITEM CODING

[see page 113]

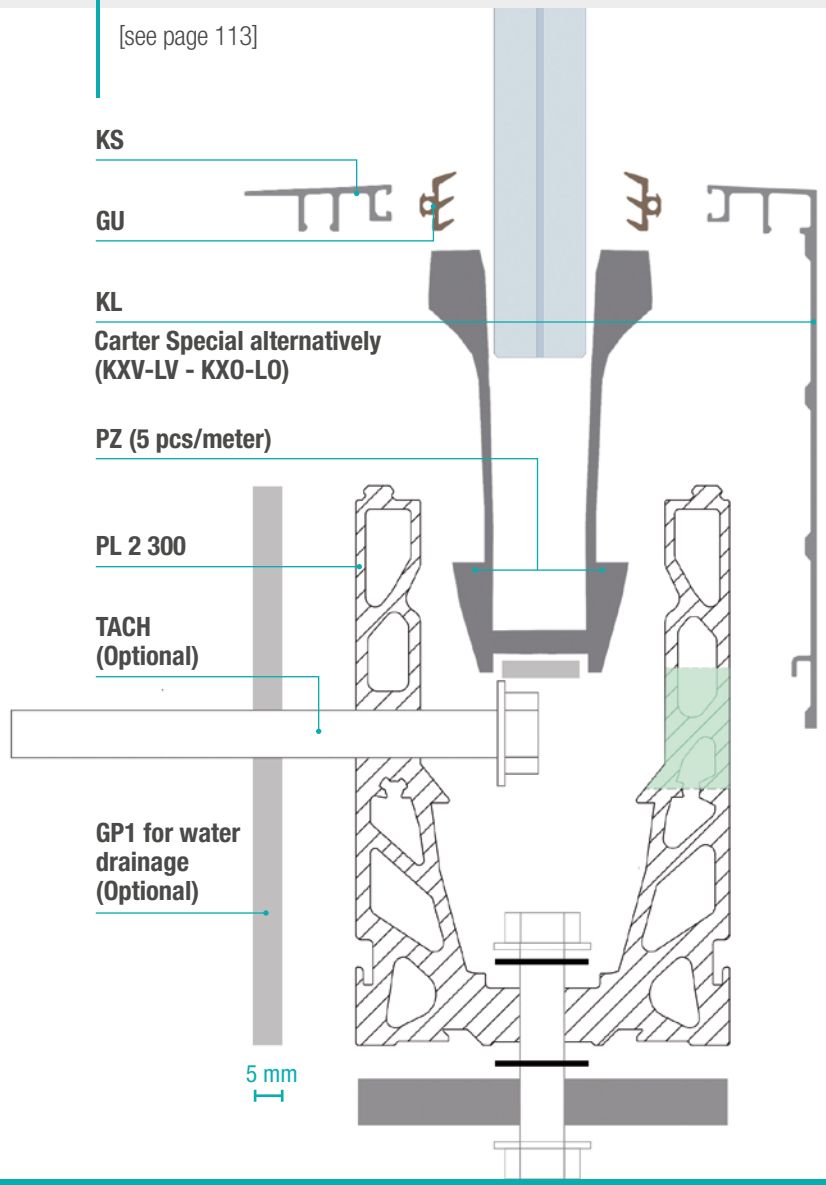

GARDA FS 300 tubular reinforcement

SLAB-FRONT FASTENING

IDEAL FOR **STADIUMS** AND **SPORTS CENTRES**

LOAD DESIGNED **300 kg/m**

LOAD ULTIMATE LIMIT STATE **450 kg/m**

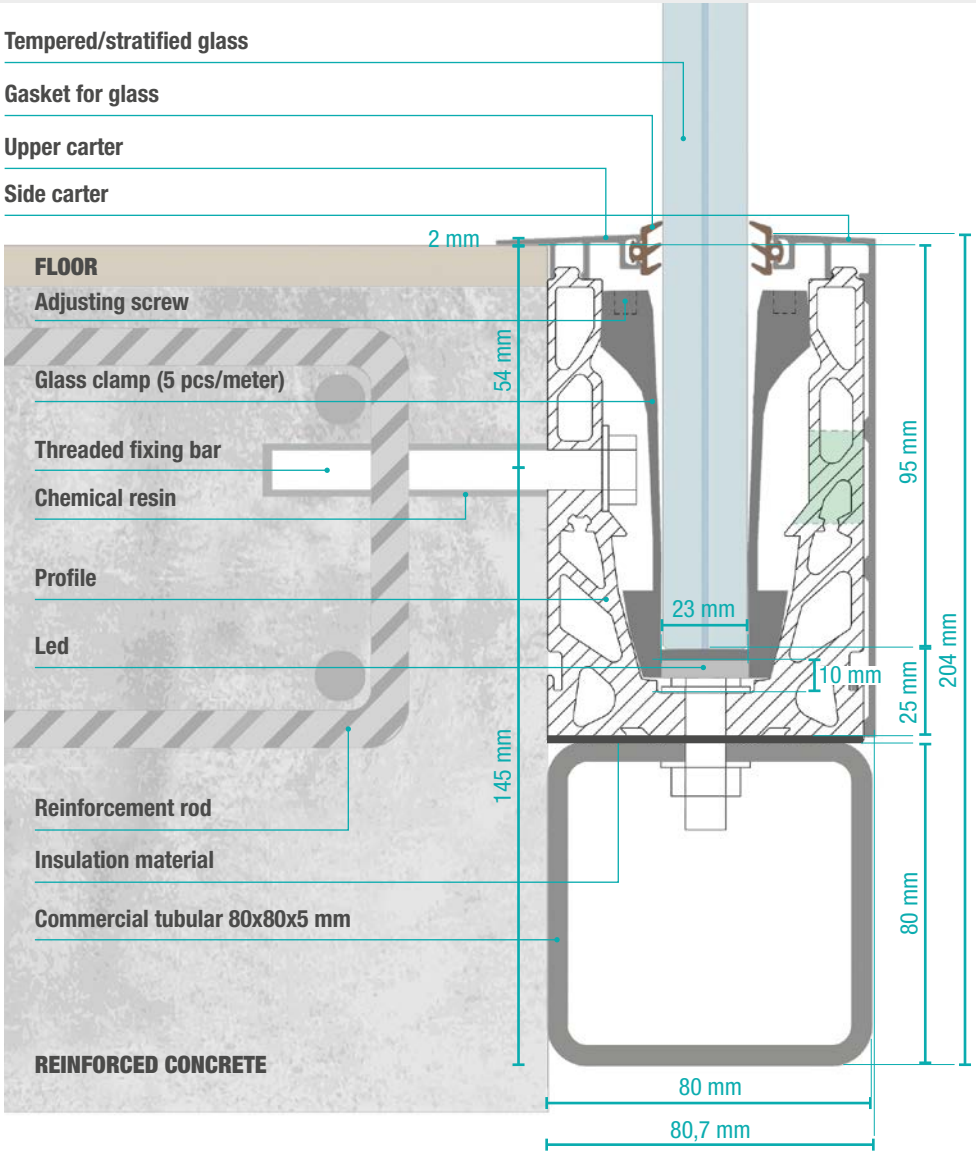

ITEM CODING

[see page 113]

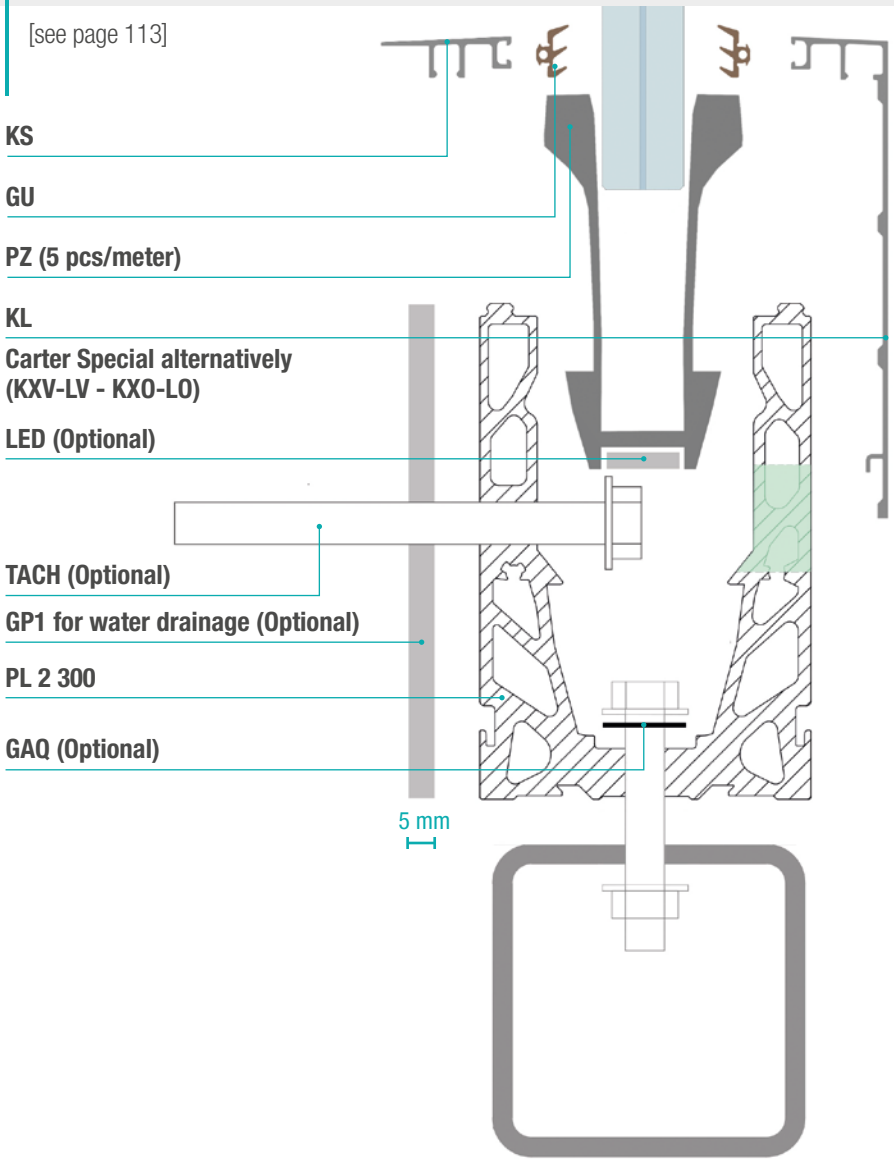

Assembly phases

Each profile is ready for installation: the balustrade is completed by fixing screws, seals, carters, clamps. Final adjustment is carried out with the aid of a simple Allen key or with the use of a screwdriver extension, which makes tightening the adjusting screws even quicker.

1 Drill the slab with the drill, position the profile and the fixing screws.

2 Place clamps inside the profile every 25 cm. Do not place the clamps at the fixing screws.

3 Insert glass.

4 Adjust the inclination of the glass by means of the screws on the clamps and tighten.

5 Insert the gaskets on the finishing carter and place the carter on the profile.

6 Installation completed.

Stratigraphy

SOME CASES OF USE

1 Profile fixed laterally on reinforced concrete slab, fixing within the reinforcement. Finishing the façade cladding with vertical plasterboard using the carter special.

2 Profile fixed laterally on reinforced concrete slab, fixing within the reinforcement. Finishing with the use of the carters supplied with the system.

3 Profile fixed laterally on a structural work beam. Finishing with the use of the carters supplied with the system.

4 Lowered fixing through the use of the special profile. Finishing the façade cladding with vertical sheet metal through the use of carter special.

GARDA MINI

FIXING **ABOVE WALL**

ISTITUTO GIORDANO

SWISS SIA 261 ÖNORM B 3716

PALACE OF JUSTICE - MILAN

GARDA MINI 200

USABLE GLASS THICKNESS (mm)

8 + 8 + 0,76
8 + 8 + 1,52

GARDA MINI 200 ON WALL

h max 65 cm

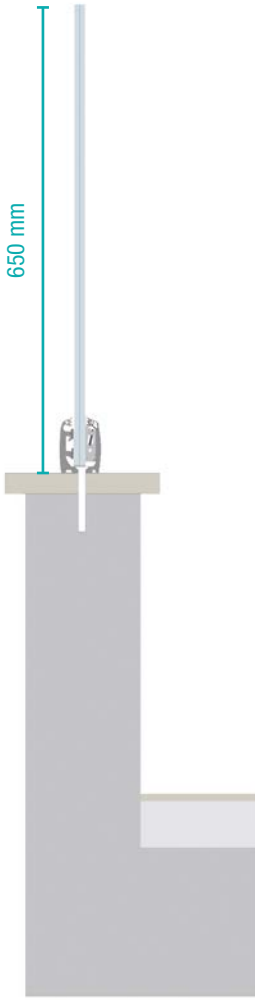

The low height balustrade with the same performance as the other types can be combined with small walls.

You can apply to GARDA MINI an optional anti-skid carter for increased safety in the presence of children.

GARDA MINI 200

FIXING **ABOVE WALL**

LOAD DESIGNED
200 kg/m

LOAD ULTIMATE LIMIT STATE
300 kg/m

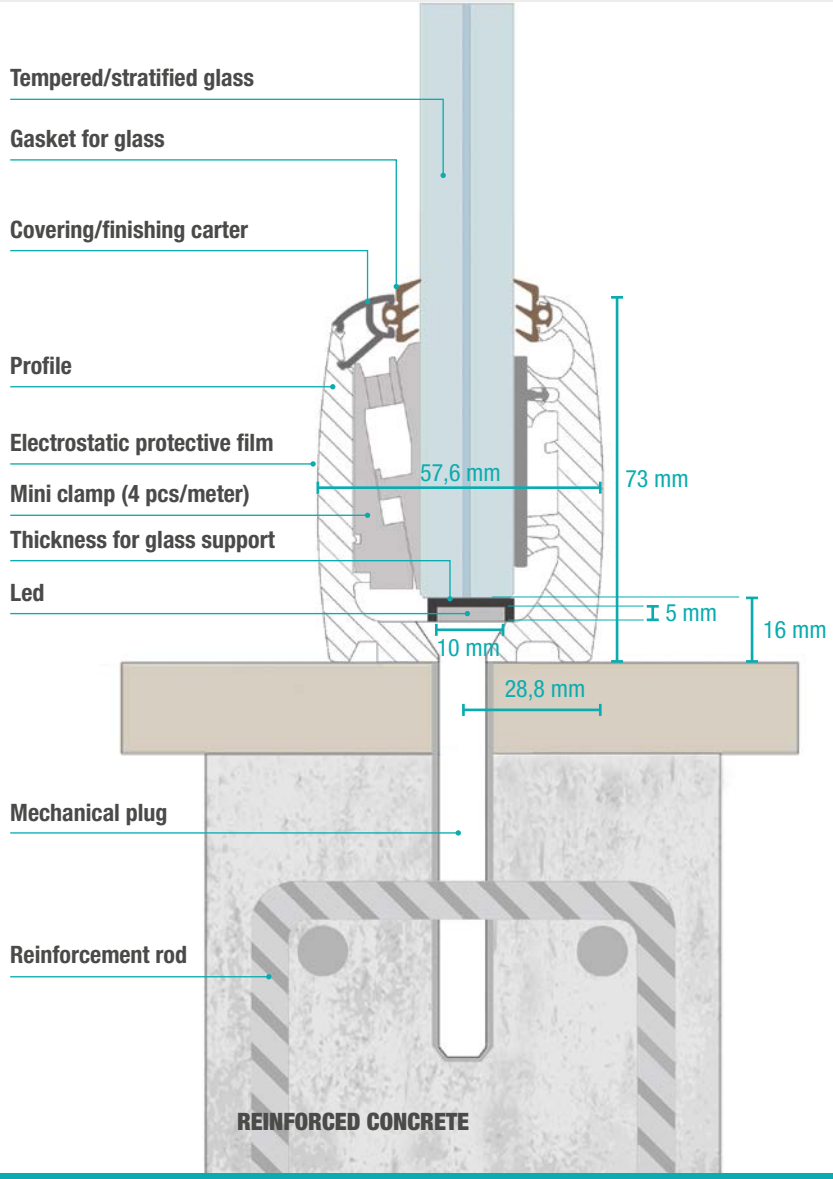

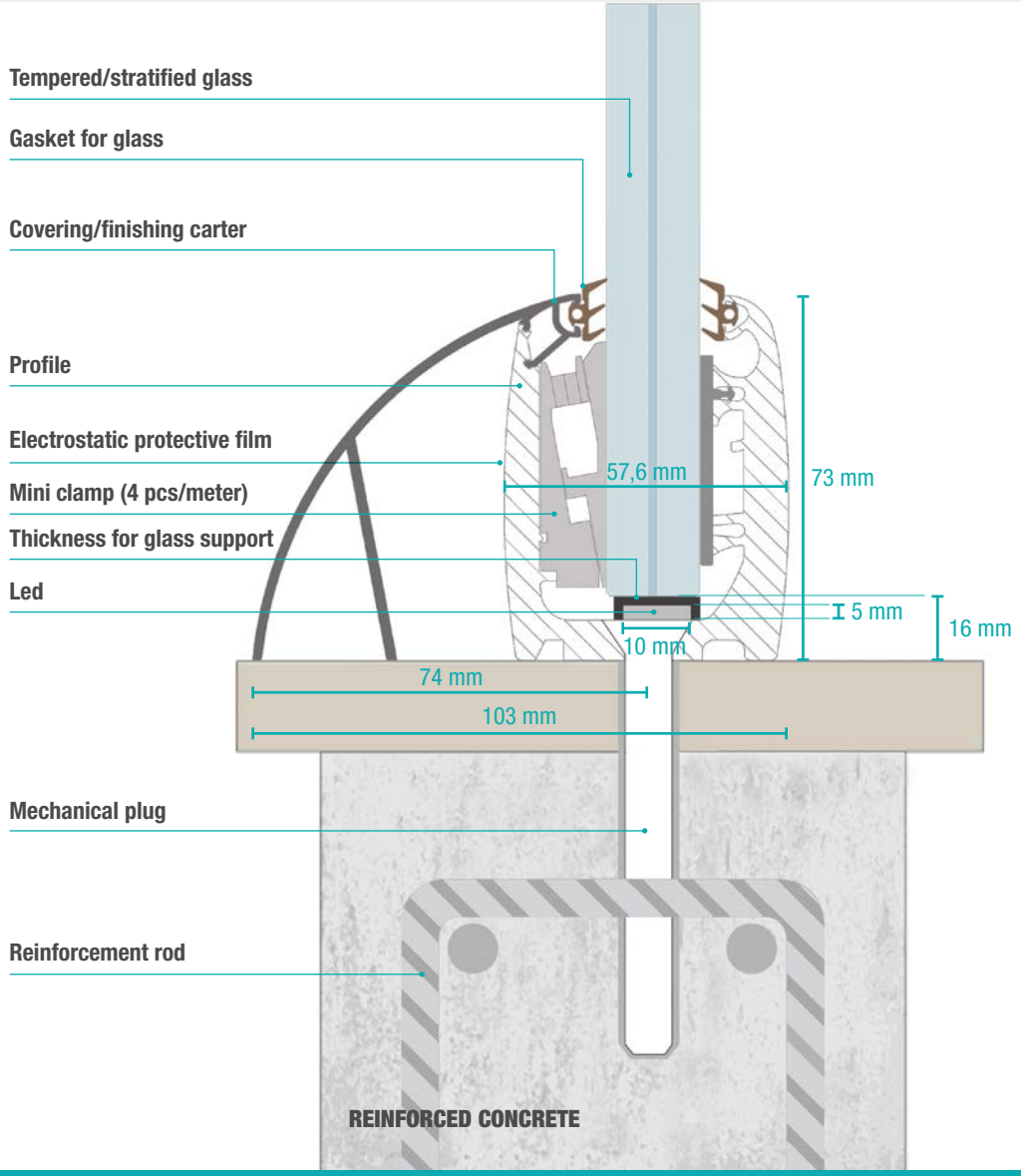

ITEM CODING

[see page 115]

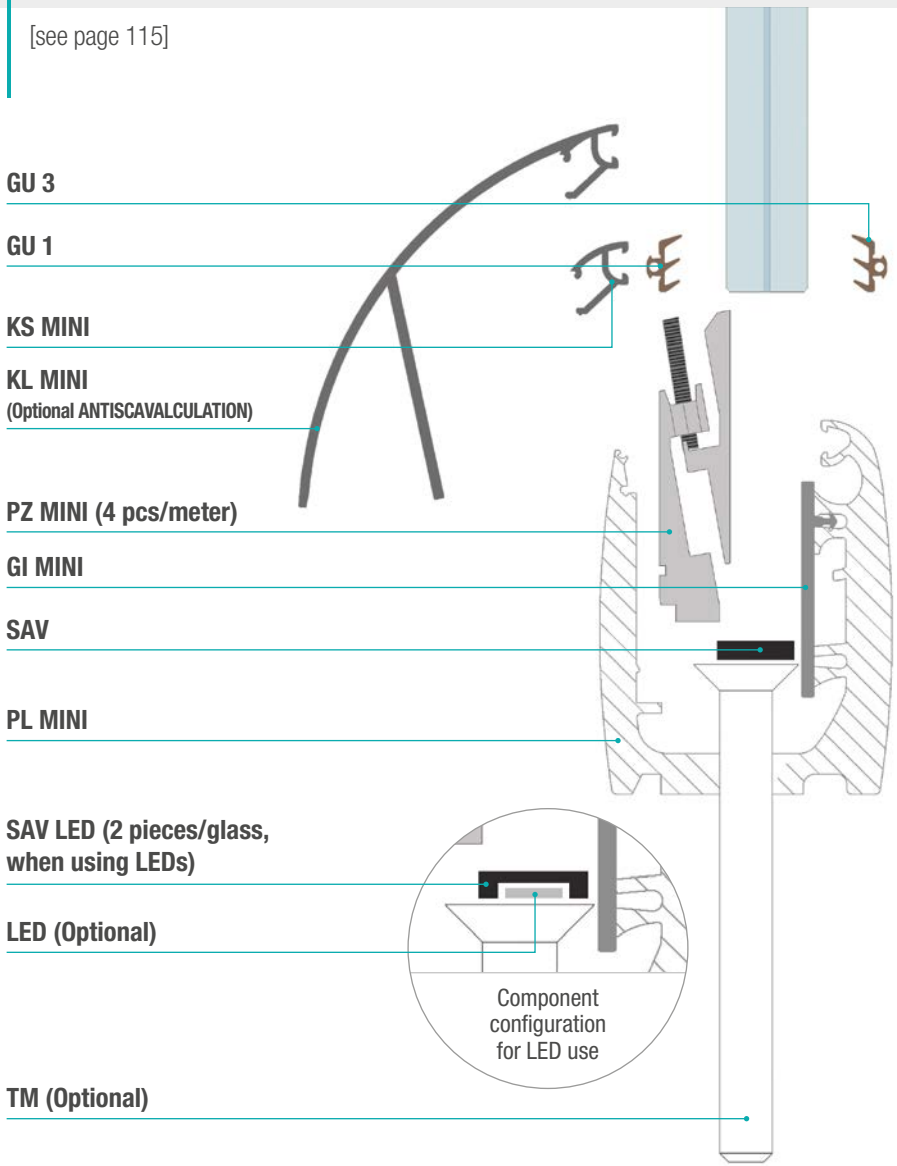

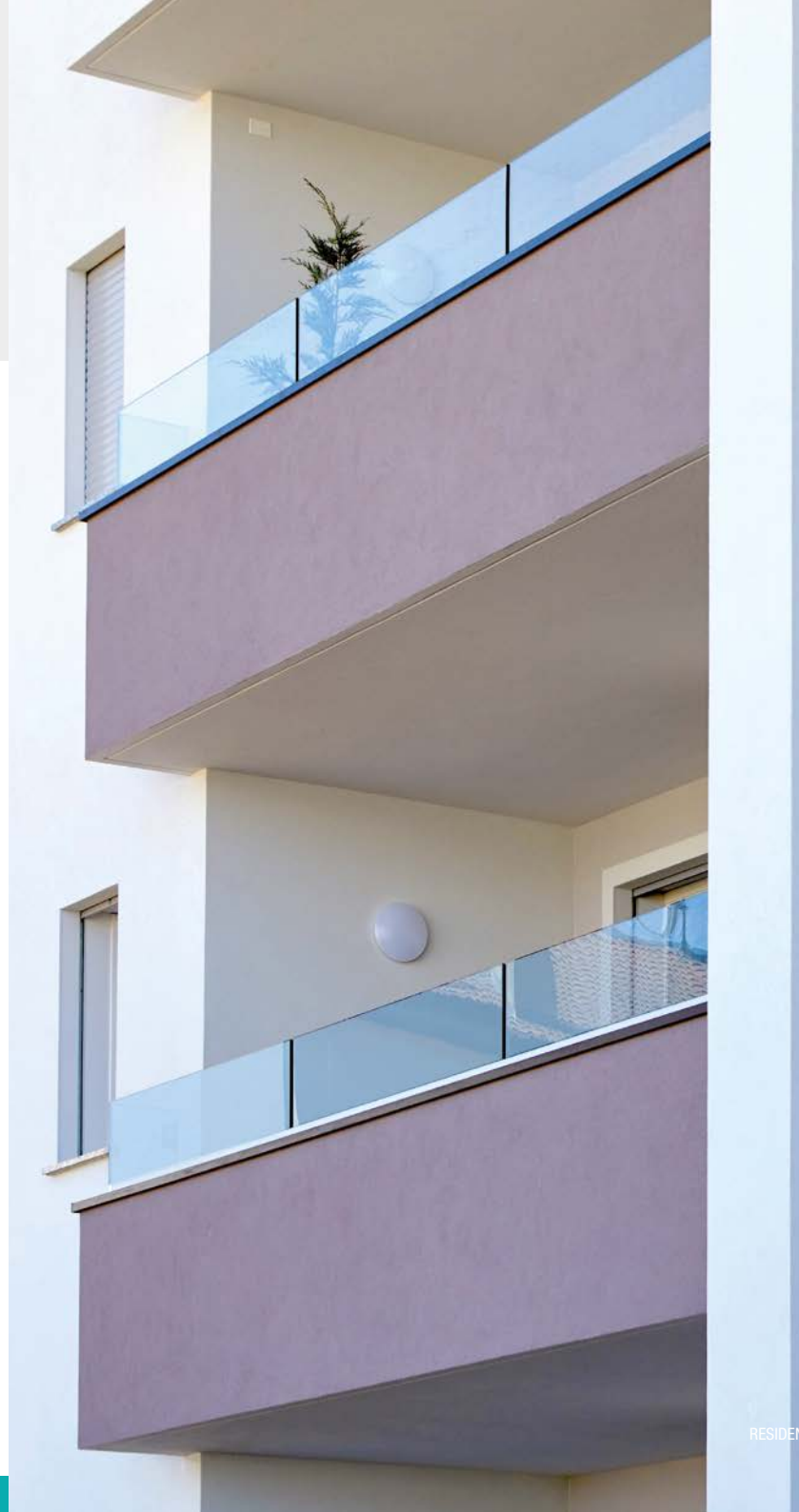

Assembly phases

Each profile is ready for installation: the balustrade is completed by fixing screws, seals, carters, clamps. Final adjustment is carried out with the help of a simple Allen key.

1 Drill the slab with the drill, position the profile and the fixing screws.

2 Place the seals inside the profile.

3 Insert glass.

4 Place the clamps inside the profile every 25 cm and tighten the screws to adjust the inclination of the glass. Do not place the clamps at the fixing screws.

5 Insert the gaskets on the finishing carter and place the carter on the profile.

6 Installation completed.

ALPIN PANORAMA HOTEL HUBERTUS - ph @Manuel Kottersteger


REALE
MUTUA

Advantages of the Garda system

CARTER

Finishing element that is applied once the installation is complete. It is installed at the end of the work, avoiding possible damage caused during installation.
Customisable finish according to aesthetic choices.

CARTER CUTTING

The use of the cover cap allows the balustrade profiles, laid at 90° or at irregular angles, to be joined without having to resort to complicated cutting of the profile itself.
This reduces waste and material costs.

Advantages of the Garda system

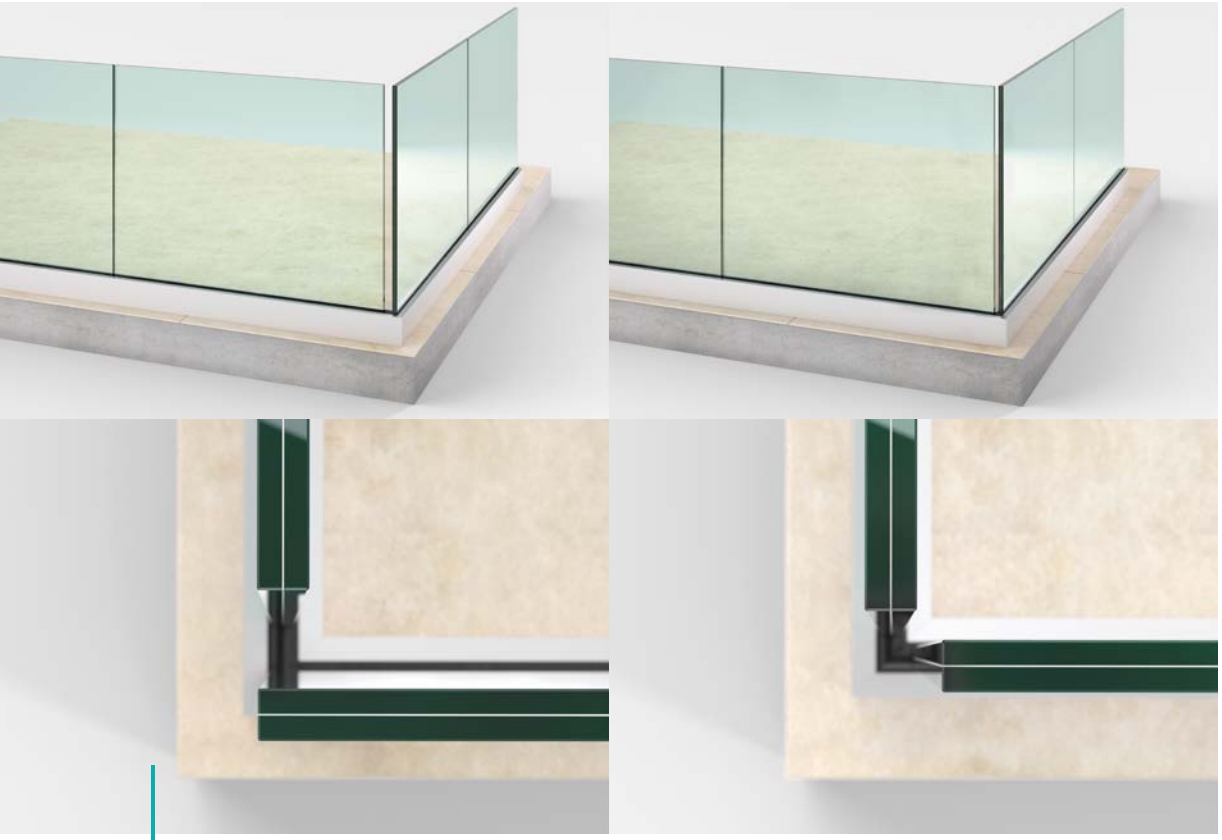

CORNERS OF BALUSTRADES

They can be made by juxtaposing the glass panels, head-on or edge-on.

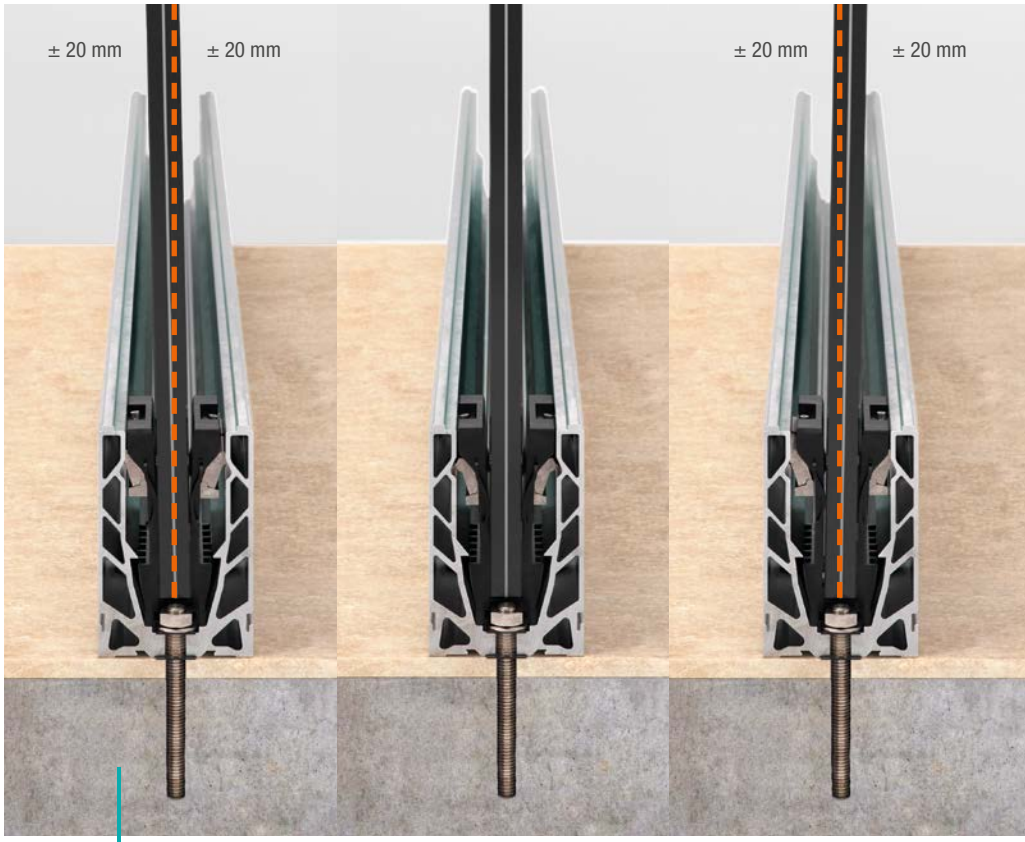

CLAMP

Patented for adjusting glass panels. It allows an adjustment in the vertical axis of ± 20 mm at the top with a glass height of 1100 mm.

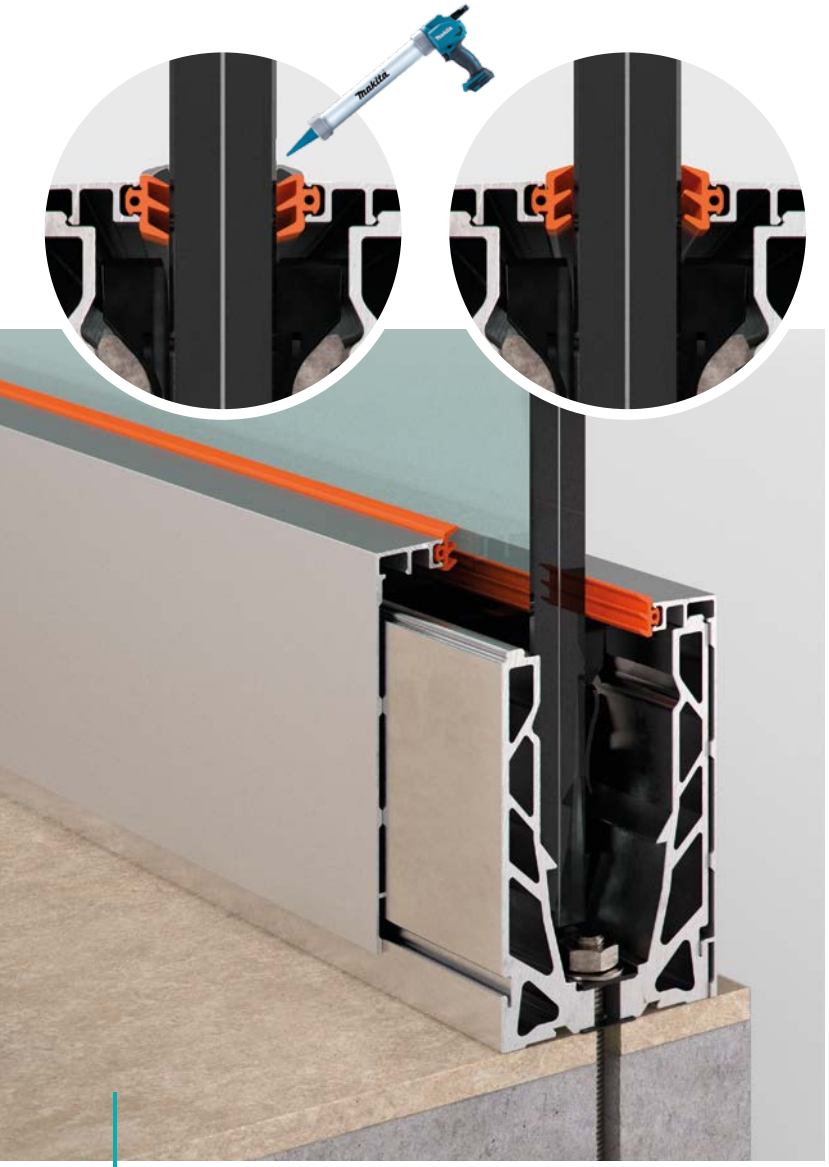

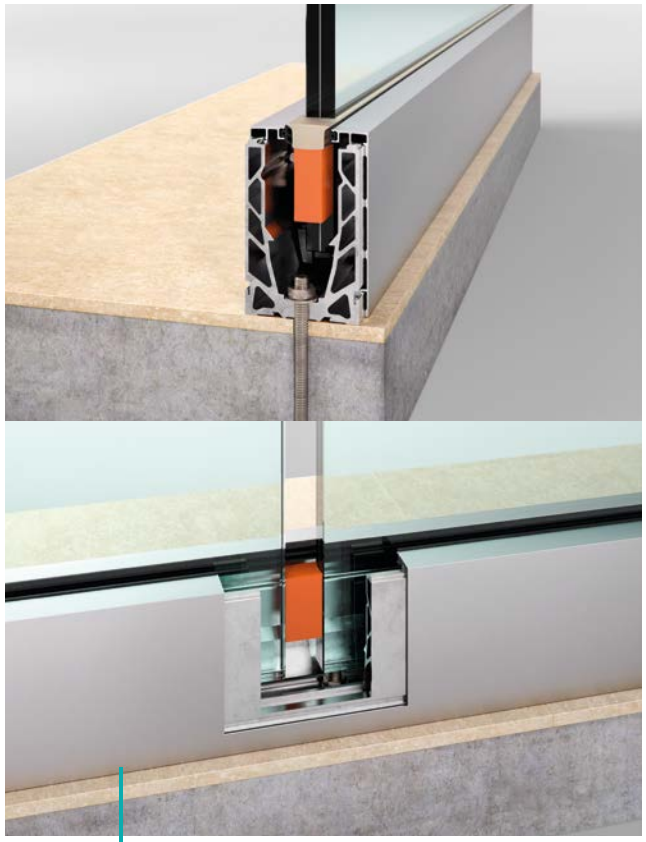

GASKET BETWEEN CARTER AND GLASS

It is inserted on the carter: depending on the aesthetic choice, there are two mounting options. Normally positioned upwards, laying downwards involves sealing with silicone that adheres to the seal thanks to its special compound. In the case of downward installation, the use of a thinner gasket is recommended.

NEOPRENE CUBE BETWEEN THE PANELS

When the downward-facing glazing gasket is used, an adhesive neoprene cube is inserted between the panels to ensure watertightness. The installation is completed with silicone placed over the gasket and neoprene.

SEAL BETWEEN GLASS AND GLASS

Small finishing element.
It is cut on the spot and fitted between the panels with a simple press.

Advantages of the Garda system

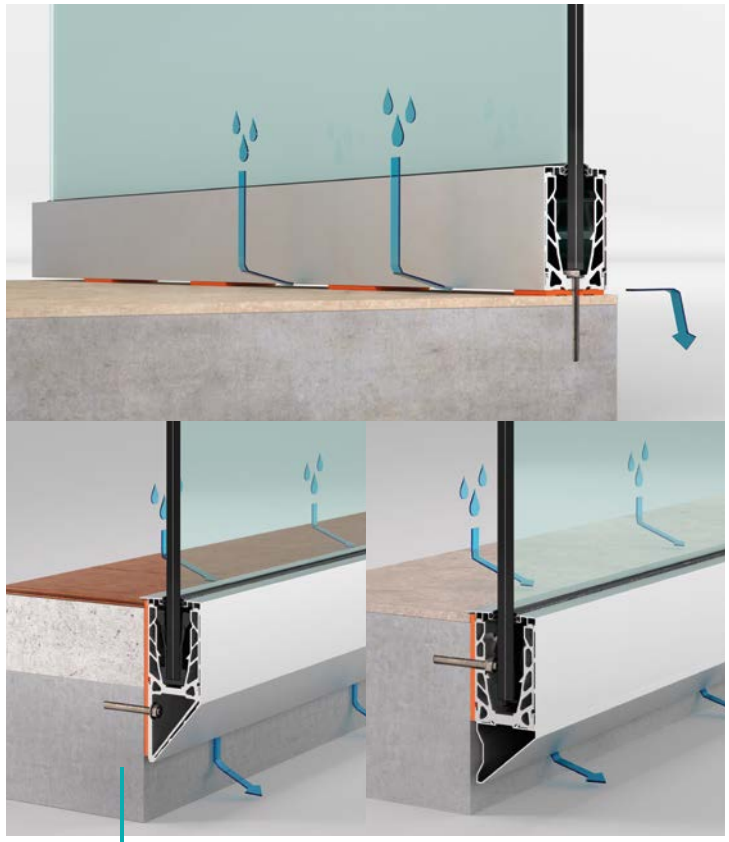

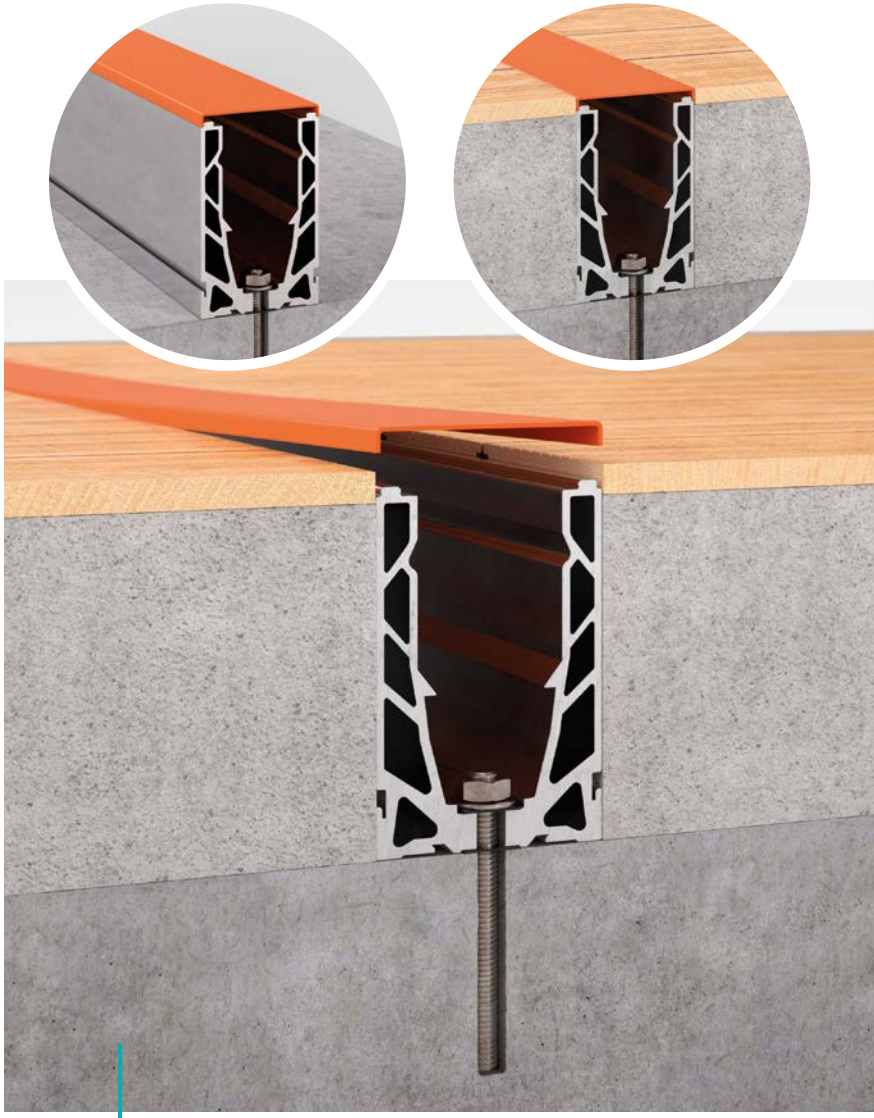

UPPER CARTER

Finishing element designed to surmount the floor, cover the normally uneven joint and the expansion joint.

WATER DRAINAGE ACCESSORY

Small optional element provided to allow water to run off under the profile.

TEMPORARY COVER CAP

Provisional element applied as protection to the profile to avoid the entry of inert materials during the completion phases of the construction site.
It also provides the floor dimension reference.

CARTER SPECIAL

With two different types of carters we can connect the system to curtain wall finishes: plasterboard, vertical or horizontal sheet metal and other materials.

Advantages of the Garda system

ANTI-INFILTRATION SEAL

The pair of gaskets offers additional protection against infiltration. It is mounted on the profile matching the anchor plug during installation.

OFFSET DEVICE

Easy to provide in the case of laminated glass with 0.76-thick plastic. Attached with interlocking on one side of the clamp.

Laying balustrades from the inside

Aluvetro's patented clamp is designed to allow installation even from the inside by applying two inserts per clamp: with this system, the possibility of adjustment from both sides is eliminated.

1 Insert the pair of accessories for laying from the inside into the spaces provided.

2 Insert the clamps into the profile every 25 cm, taking care to place the clamp part with the pair of accessories on the outer side.

3 Mount the gasket on the carter, facing downwards and position only the outer carter.

4 Insert the glass.

5 Adjust only the inner side with the Allen key and tighten the glass.

6 Mount the inner carter to which the gasket is already fitted.

POINT

FIXING **FRONT SIDE OF SLAB POINT-BY-POINT**

POINT

USABLE GLASS THICKNESS (mm)

8 + 8 + 0.76
8 + 8 + 1.52
10 + 10 + 0.76
10 + 10 + 1.52
12 + 12 + 0.76
12 + 12 + 1.52

Recommended glass	Design load Kn/m
10/10 T+I PVB	1,0 *
10/10 T+I CLASS 2	2,0 *

* to be verified on the basis of the geometry of fixings

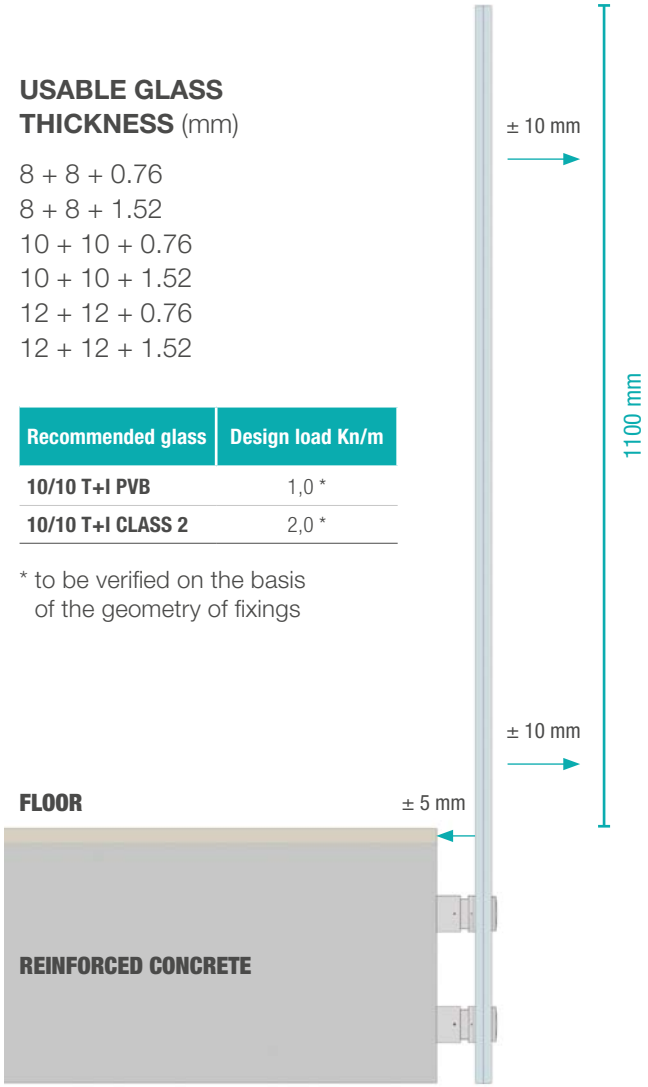

The most classic of fixings

The classic point fixing, which has always been popular for interior applications and stairwells.

POINT

FIXING **FRONT SIDE OF SLAB POINT-BY-POINT**

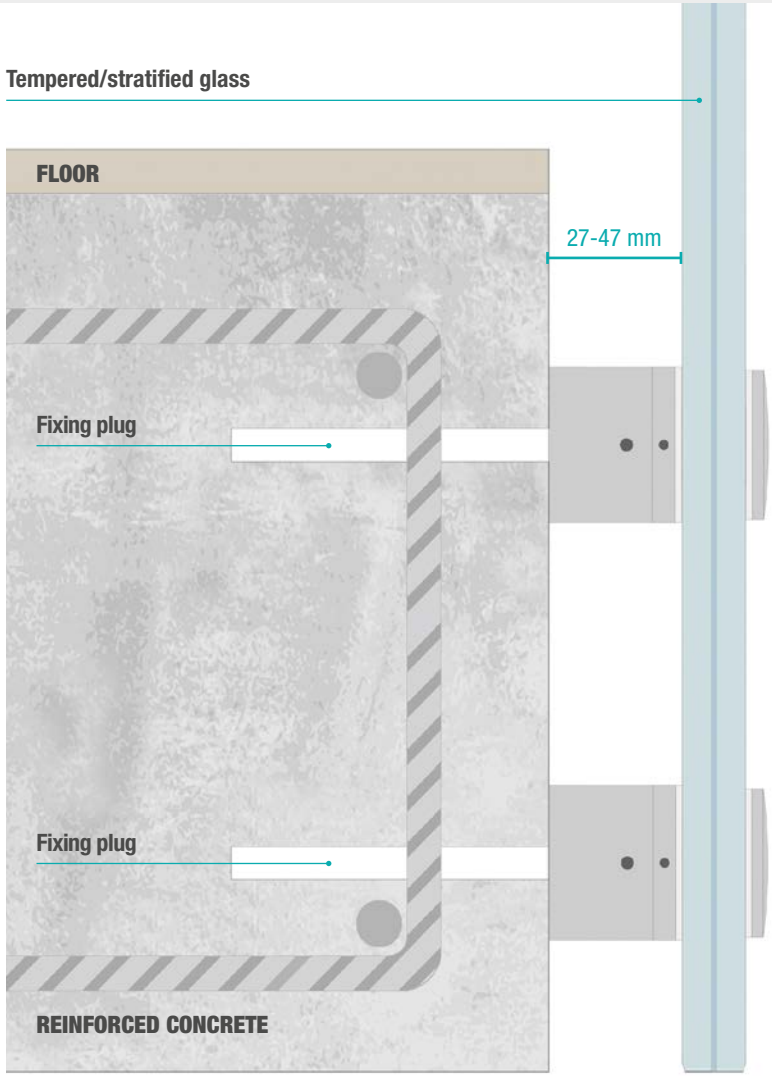

ITEM CODING

[see page 116]

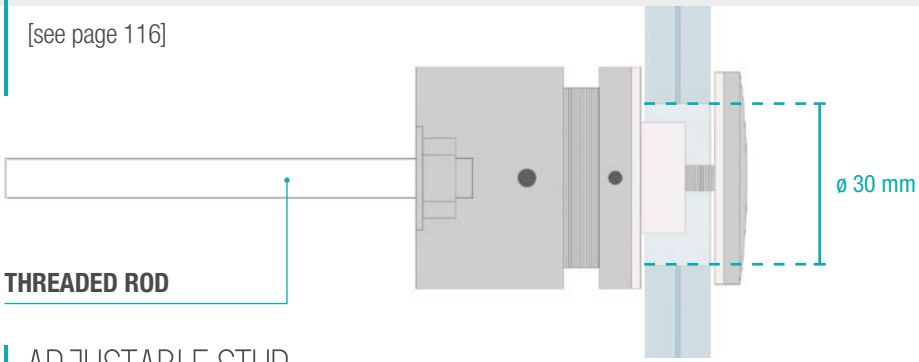

ADJUSTABLE STUD

Code BR316
Diameter 48 mm
Adjustment 27 - 32 mm
Glass 10 - 21,52 mm
AISI 316

Code BR316 BIG
Diameter 48 mm
Adjustment 42 - 52 mm
Glass 10 - 21,52 mm
AISI 316

Code BR304
Diameter 48 mm
Adjustment 42 - 52 mm
Glass 10 - 21,52 mm
AISI 304

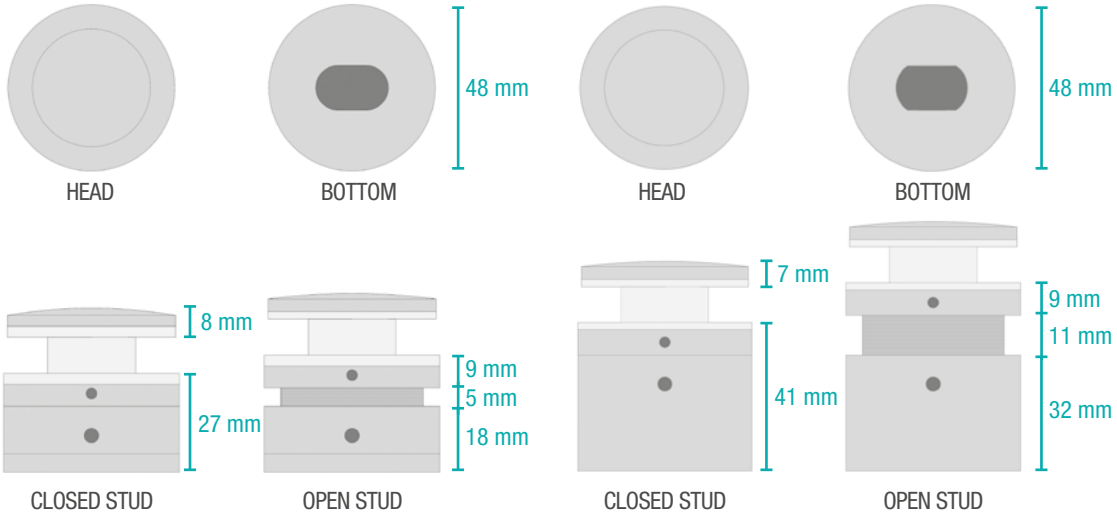

Assembly phases

1 Mark the position of the holes and drill.
Insert the fixing screws.

2 Insert the back of the stud with the slot oriented horizontally and fix to the wall.

3 Screw in the threaded inner part of the stud.

4 Position the glass and close with the front disc.

5 Make the adjustment at the front.

6 Installation completed.

LAMINA

CANOPY

SUNSCREEN CANOPY with opaque glass

Protects and repairs

Suspended canopy, a natural evolution of the classic version with tie rods, with certified load-bearing capacity and hardened, laminated glass.

USABLE GLASS THICKNESS (mm)

8 + 8 + 1,52
10 + 10 + 1,52
12 + 12 + 1,52

MAXIMUM PROJECTION:

130 cm

GLASS NOTCH PATTERN
for the assembly of glass fall protection pins

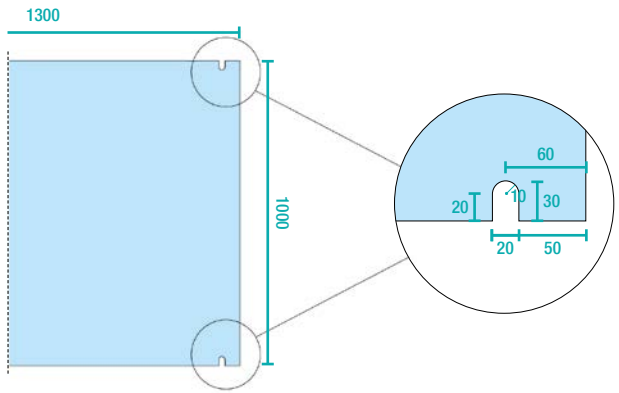

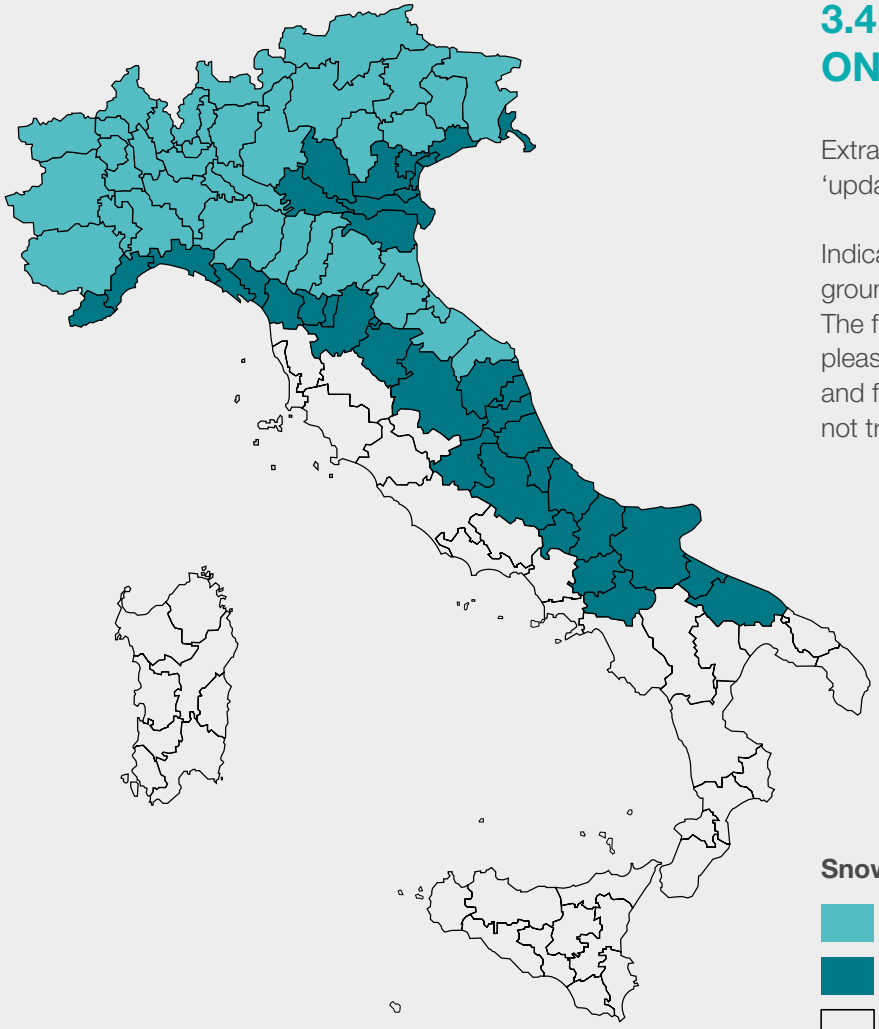

3.4.1 SNOW LOAD ZONES ON ROOFS

Extract from the decree of 17 January 2018 'update of the standards for construction'

Indicates the reference value of the snow load on the ground for locations below 1500 m above sea level. The figure shown is for illustrative purposes only, please check for updates and/or local restrictions and further specifications given in the MD itself and not transcribed on these pages.

Snow load zones kN/m²

- **1 1,50**
- **2 1.00**
- **3 0.60**

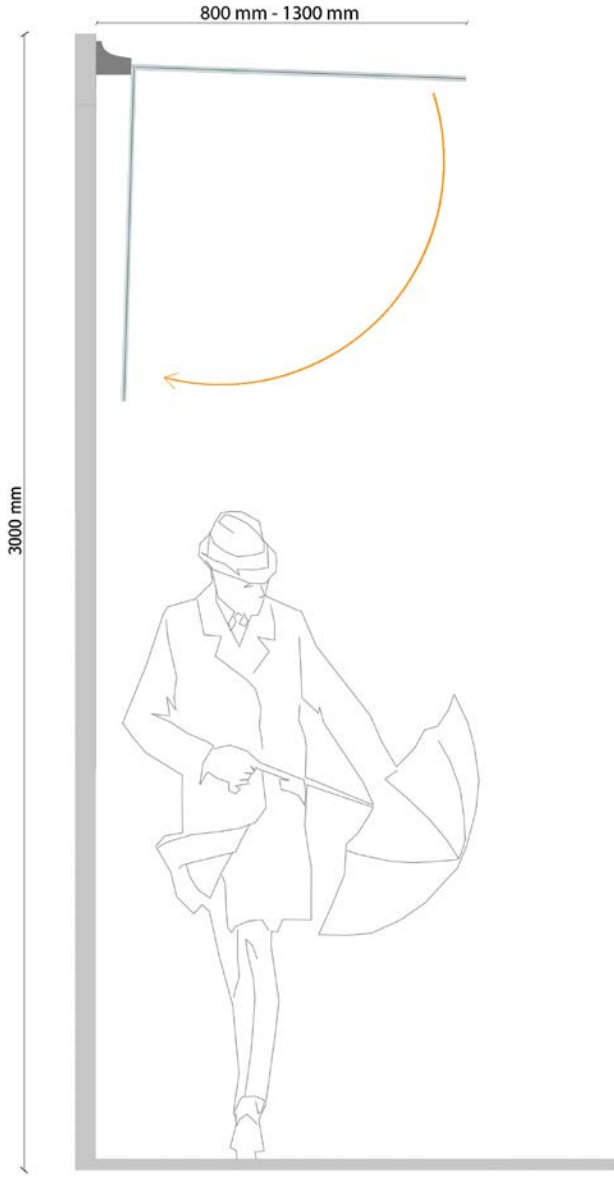

SNOW LOAD ON ROOFS

SITUATION A

two sheets of toughened glass laminated with plastic DG41 1,52 mm

	PROJECTION (m)					
GLASS (mm)	0,80	0,90	1,00	1,10	1,20	1,30
8+8	2,19	1,61	1,2	0,91	0,70	0,53
10+10	3,54	2,63	1,99	1,54	1,20	0,94
12+12	5,2	3,89	2,98	2,32	1,84	1,46

* result: load kN/m^2

SITUATION B

two sheets of toughened glass, one of which is broken, laminated with plastic DG41 1,52 mm

	PROJECTION (m)					
GLASS (mm)	0,80	0,90	1,00	1,10	1,20	1,30
8+8	1,71	1,28	0,97	0,75	0,59	0,47
10+10	2,74	2,06	1,58	1,24	0,99	0,79
12+12	4,01	3,02	2,34	1,85	1,48	1,2

* result: load kN/m^2

In the event of accidental breakage, the glass bends by projecting 90° and remains suspended thanks to the safety retainers. We recommend laying the profile above 3.10 m.

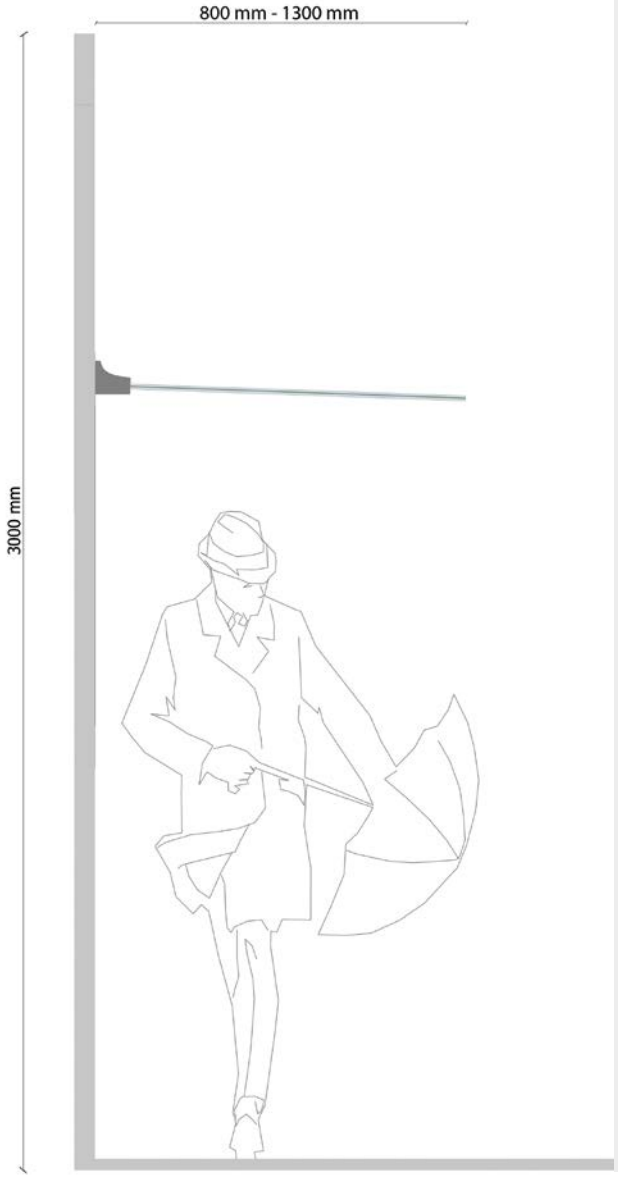

SNOW LOAD ON ROOFS

SITUATION A

two sheets of toughened glass laminated with SG5000 1,52 mm rigid plastic

	PROJECTION (m)					
GLASS (mm)	0,80	0,90	1,00	1,10	1,20	1,30
8+8	4,71	3,47	2,6	1,98	1,50	1,14
10+10	7,28	5,42	4,13	3,19	2,48	1,95
12+12	10,36	7,78	5,99	4,68	3,69	2,94

* result: load kN/m^2

SITUATION B

two panels of toughened glass, one of which is broken, laminated with SG5000 1,52 mm rigid plastic

	PROJECTION (m)					
GLASS (mm)	0,80	0,90	1,00	1,10	1,20	1,30
8+8	1,71	1,28	0,97	0,75	0,59	0,47
10+10	2,74	2,06	1,58	1,24	0,99	0,79
12+12	4,01	3,02	2,34	1,85	1,48	1,2

* result: load kN/m^2

In the event of accidental breakage, the glass retains residual stability by remaining in a horizontal position. There are no constraints on the height of the canopy.

LAMINA

CANOPY

Glass canopy, also ideal as a shading element on entrances or windows: it can be used as a sunshade element to comply with energy performance regulations (Decree No. 176 of 12/01/2017 for Lombardy and Decree 26/6/2015 at national level). Max. projections up to 130 cm.

ITEM CODING

[see page 118]

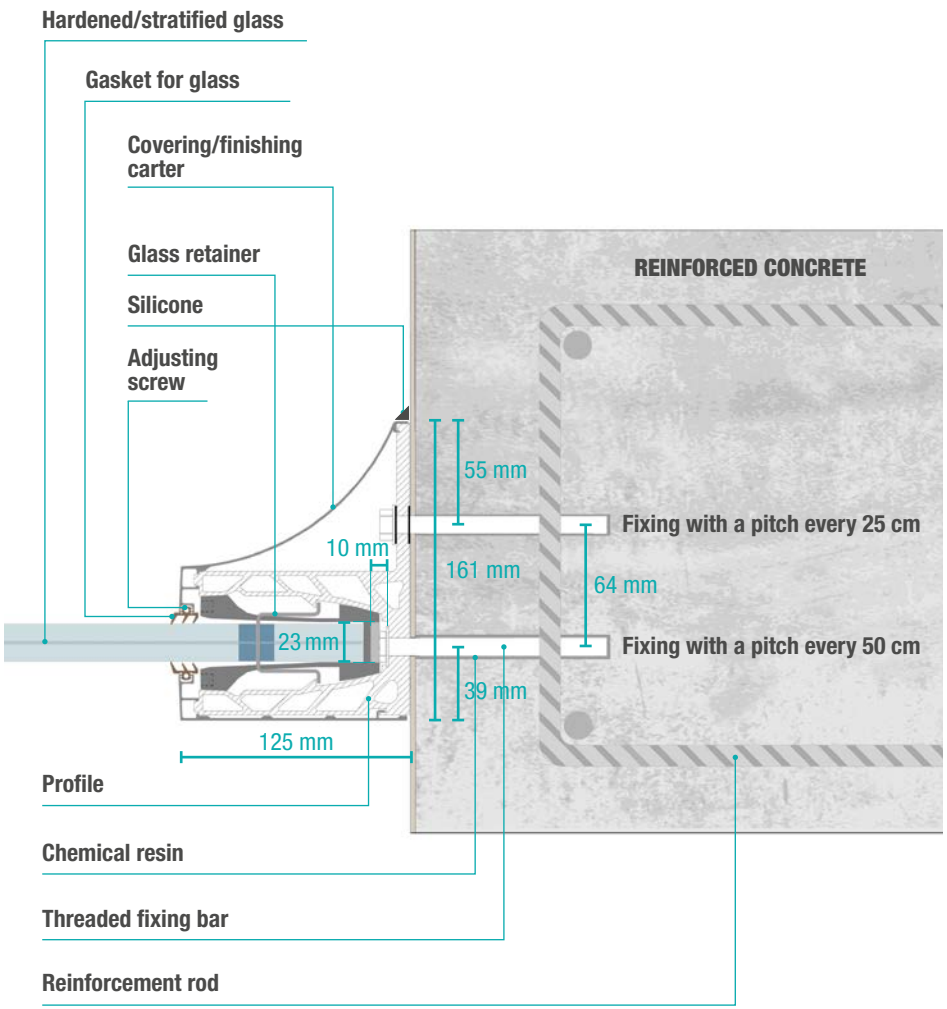

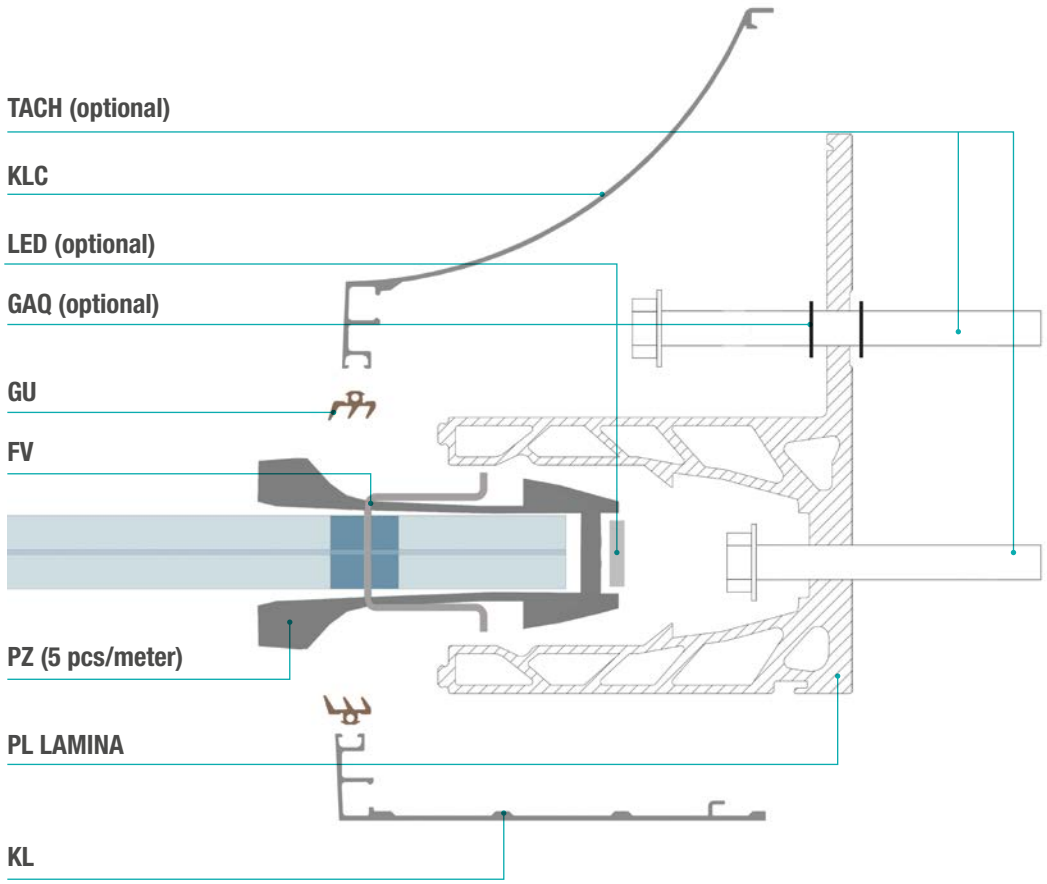

Fixing at the clamp: step every 50 cm
Fixing at the fin: pitch every 25 cm

Assembly phases

Each profile is ready for installation: the canopy is completed with fastening screws, gaskets, covers, clamps. Final adjustment is carried out with the help of a simple Allen key.

1 Drill the wall with the drill, positioning the profile and fixing screws.

2 Place clamps inside the profile every 20 cm. Do not place the clamps at the fixing screws.

3 Insert glass and place glass stops at the beginning and end of each pane.

4 Adjust the inclination of the glass by means of the screws on the clamps and tighten.

5 Lay the carters to which the gasket was previously fitted.

6 Apply silicon to the carters, installation complete.

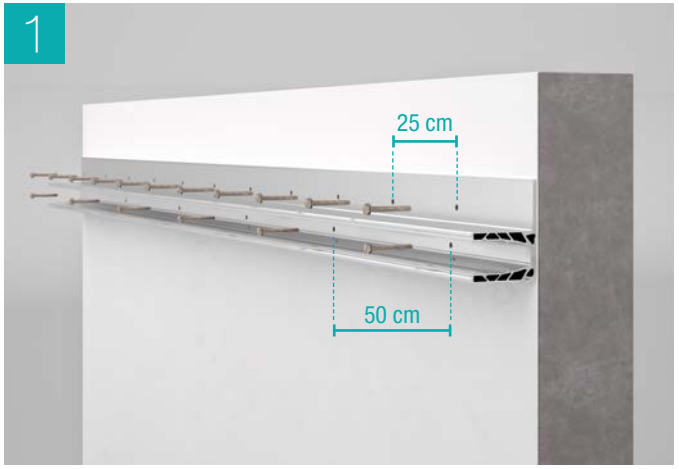

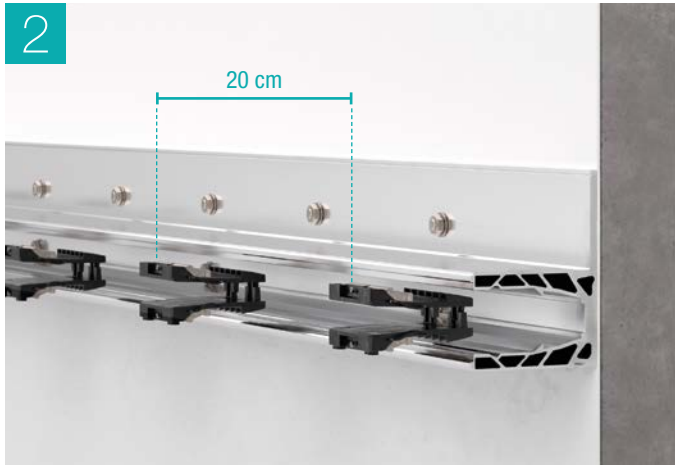

MODULAR

A new generation of parapet with a modern design, ideal in any renovation of apartment block curtain walls or in new construction projects.

Numerous technical and aesthetic advantages characterise the Modular balustrades, but it is the customisation that is the real distinguishing feature of the system: the design, the upright geometry with curtain wall at choice of glass, vertical 'rod' sheet metal or other materials, the colouring and the type of fixing guarantee an architectural result of the highest standard.

Modular is designed for quick and easy installation on site, with many technical advantages for installers. Each module is delivered to the worksite ready for installation.

PUSH TEST UP TO **4,5 kN/m**

ISTITUTO GIORDANO

Technical benefits

- Quick and easy installation
- Arrives on site pre-assembled and ready for installation
- Fastening versions for every need
- System tested at certified laboratories
- The surface prevents children from climbing
- The system allows water to be drained
- Maintenance limited to cleaning only

Aesthetic benefits

- Modern and minimalist design
- Customisation of the frame with texture and RAL colour
- Customisable curtain wall, at choice of glass, sheet metal and vertical rods
- Clean and essential design
- Ideal for renovating curtain walls in renovation work
- Decorative element in new projects
- Glass customisation with colours
- Corner with 'glass-glass' continuity without upright


DISCOVER MODULAR:
FRAME THE QRCODE AND
DOWNLOAD THE CATALOGUE

System components

GARDA

GARDA ONE

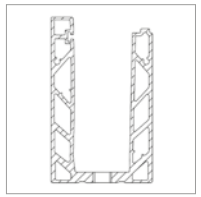

Solid perforated base profile		
Code	Length	Colour
PL1o NAT	3-6 m	natural
PL1o ARG	3-6 m	silver (coated)
PL1o 9010	3-6 m	white ral 9010 (coated)

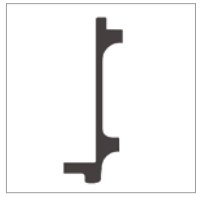

GARDA ONE clamp	
Code	Glass dimensions
PZo 8	8/8.4
PZo 10	10/10.4

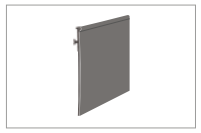

Inner gasket ONE	
Code	Notes
GoI	black inner gasket

Upper carter		
Code	Length	Colour
KSo NAT	3-6 m	natural
KSo ARG	3-6 m	silver
KSo 9010	3-6 m	white ral 9010

Carter gasket		
Code	Glass dimensions	Colour
GUB 4	8/8.4	black
GUB 2	10/10.4	black

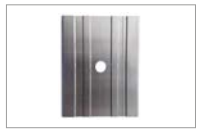

Perforated guide for water drainage		
Code	Length	Colour
GPo	100 mm	natural

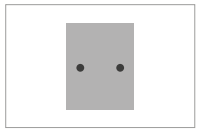

Closed end cap	
Code	Colour
T1o NAT R/L	natural
T1o ARG R/L	silver
T1o 9010 R/L	white ral 9010

Neoprene cube between the glass panels	
Code	Notes
CB	5 to 30 mm glass spacing, black

Threaded rod		
Code	Length	Notes
TACH 14	140 mm	M10 steel 8.8 galvanised

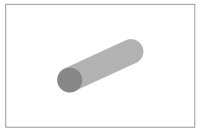

Alignment pin		
Code	Length	Notes
ALo	50 mm	coupling between profiles

Extension for screwdriver including insert	
Code	Notes
PR55	Extension for screwdriver including coupling
PR INS	Replacement insert for extension accessory

Upper carter		
Code	Length	Colour
KS NAT	3-6 m	natural
KS ARG	3-6 m	silver
KS 9010	3-6 m	ral 9010

GARDA SP 200

Solid perforated base profile		
Code	Length	
PL1 200	3-6 m	

GARDA clamp		
Code	Glass dimensions	
PZ 8	8/8.4	
PZ10	10/10.4	
PZ12	12/12.4	

Glass off-set device with plastic .2		
Code	Glass dimensions	
CO	8/8.2 - 10/10.2 - 12/12.2	

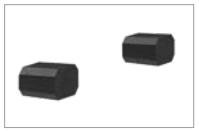

Pair of accessories for laying on the inside only		
Code	Notes	
IN	Insert into the clamps in the prepared slots	

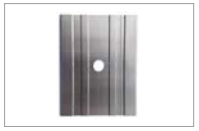

Perforated floor guide for water drainage			
Code	Length	Colour	
GP	L 100 mm	natural	

Temporary coverage basic profile			
Code	Length	Colour	
KCH	3-6 m	natural	

Side carter			
Code	Length	Colour	
KL NAT	3-6 m	natural	
KL ARG	3-6 m	silver	
KL INOX	3-6 m	brushed	
KL 9010	3-6 m	ral 9010	
KL CR*	3 m	15 micron glossy	
KL CP*	3 m	champagne	
KL DBZ*	3-6 m	dark bronze	
KL GBR*	3-6 m	burnished grey	
KL LGN*	3-6 m	wood effect	
KL ORO*	3 m	matt gold	
KL CTN*	3-6 m	corten	
KL BK*	3-6 m	black anodised	

* on request

Extension for screwdriver including insert		
Code	Notes	
PR55	Extension for screwdriver including coupling	
PR INS	Replacement insert for extension accessory	

Carter gasket				
Code	Glass dimensions	Colour	Notes	
GUB 1	8/8.4	black	compatible silicone	
GUB 2	10/10.4	black	compatible silicone	
GUB 3	12/12.4	black	compatible silicone	
GUW 1	8/8.4	white	silicone	
GUW 2	10/10.4	white	silicone	
GUW 3	12/12.4	white	silicone	

GARDA SP 300

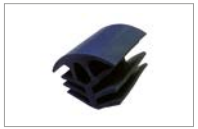

Gasket between panels		
Code	Colour	
GV BLACK	black	
GV WHITE	white	

Neoprene cube between the glass panels			
Code	Sizes	Colour	
CB	20 x 30 x 50	black	

Closed end caps		
Code	Colour	
T1 NAT	natural	
T1 ARG	silver	
T1 INOX	brushed	
T1 9010	ral 9010	
T1 CR*	15 micron glossy	
T1 CP*	champagne	
T1 DBZ*	dark bronze	
T1 GBR*	burnished grey	
T1 LGN*	wood effect	
T1 ORO*	matt gold	
T1 CTN*	corten	
T1 BK*	black anodised	

* on request

Threaded rod			
Code	Length	Notes	
TACH 14	140 mm	M10 steel 8.8 galvanised	

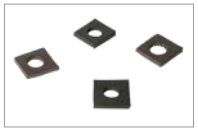

Anti-leakage water seal	
Code	
GAQ	

Solid perforated base profile		
Code	Length	
PL1 300	3-6 m	

GARDA clamp		
Code	Glass dimensions	
PZ 8	8/8.4	
PZ10	10/10.4	
PZ12	12/12.4	

Glass off-set device with plastic .2		
Code	Glass dimensions	
CO	8/8.2 - 10/10.2 - 12/12.2	

Pair of accessories for laying on the inside only		
Code	Notes	
IN	Insert into the clamps in the prepared slots	

Temporary coverage basic profile			
Code	Length	Colour	
KCH	3-6 m	natural	

Perforated floor guide for water drainage			
Code	Length	Colour	
GP	L 100 mm	natural	

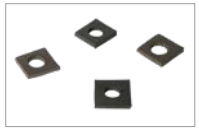

Anti-leakage water seal	
Code	
GAQ	

Side carter

Code	Length	Colour	
KL NAT	3-6 m	natural	
KL ARG	3-6 m	silver	
KL INOX	3-6 m	brushed	
KL 9010	3-6 m	ral 9010	
KL CR*	3 m	15 micron glossy	
KL CP*	3 m	champagne	
KL DBZ*	3-6 m	dark bronze	
KL GBR*	3-6 m	burnished grey	
KL LGN*	3-6 m	wood effect	
KL ORO*	3 m	matt gold	
KL CTN*	3-6 m	corten	
KL BK*	3-6 m	black anodised	

* on request

Extension for screwdriver including insert

Code	Notes	
PR55	Extension for screwdriver including coupling	
PR INS	Replacement insert for extension accessory	

Carter gasket

Code	Glass dimensions	Colour	Notes	
GUB 1	8/8.4	black	compatible silicone	
GUB 2	10/10.4	black	compatible silicone	
GUB 3	12/12.4	black	compatible silicone	
GUW 1	8/8.4	white	silicone	
GUW 2	10/10.4	white	silicone	
GUW 3	12/12.4	white	silicone	

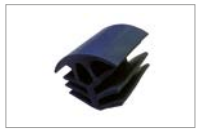

Gasket between panels

Code	Colour	
GV BLACK	black	
GV WHITE	white	

Neoprene cube between the glass panels

Code	Dimension	Colour	
CB	20 x 30 x 50	black	

Closed end caps

Code	Colour	
T1 NAT	natural	
T1 ARG	silver	
T1 INOX	brushed	
T1 9010	ral 9010	
T1 CR*	15 micron glossy	
T1 CP*	champagne	
T1 DBZ*	dark bronze	
T1 GBR*	burnished grey	
T1 LGN*	wood effect	
T1 ORO*	matt gold	
T1 CTN*	corten	
T1 BK*	black anodised	

* on request

Threaded rod

Code	Length	Notes	
TACH 14	140 mm	M10 steel 8.8 galvanised	

GARDA SP 200 SPECIAL

Solid perforated base profile		
Code	Length	
PL1 200 S	3-6 m	

GARDA clamp		
Code	Glass dimensions	
PZ 8	8/8.4	
PZ10	10/10.4	
PZ12	12/12.4	

Glass off-set device with plastic .2		
Code	Glass dimensions	
CO8	8/8.2	
CO10	10/10.2	
CO12	12/12.2	

Pair of accessories for laying on the inside only		
Code	Notes	
IN	Insert into the clamps in the prepared slots	

Temporary coverage basic profile			
Code	Length	Colour	
KCH	3-6 m	natural	

Extension for screwdriver including insert		
Code	Notes	
PR55	Extension for screwdriver including coupling	
PR INS	Replacement insert for extension accessory	

Threaded rod			
Code	Length	Notes	
TACH 14	140 mm	M10 steel 8.8 galvanised	

Side carter			
Code	Length	Colour	
KL NAT	3-6 m	natural	
KL ARG	3-6 m	silver	
KL 9010	3-6 m	ral 9010	
KL CR*	3 m	15 micron glossy	
KL CP*	3 m	champagne	
KL DBZ*	3-6 m	dark bronze	
KL GBR*	3-6 m	burnished grey	
KL LGN*	3-6 m	wood effect	
KL ORO*	3 m	matt gold	
KL CTN*	3-6 m	corten	
KL BK*	3-6 m	black anodised	

* on request

Curved side carter			
Code	Length	Colour	
KLC NAT	3-6 m	natural	
KLC ARG	3-6 m	silver	
KLC 9010	3-6 m	ral 9010	
KLC CR*	3 m	15 micron glossy	
KLC CP*	3 m	champagne	
KLC DBZ*	3-6 m	dark bronze	
KLC GBR*	3-6 m	burnished grey	
KLC LGN*	3-6 m	wood effect	
KLC ORO*	3 m	matt gold	
KLC CTN*	3-6 m	corten	
KLC BK*	3-6 m	black anodised	

* on request

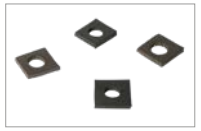

Anti-leakage gasket selling in Pair	
Code	
GAQ	

GARDA AP 200

Carter gasket

Code	Glass dimensions	Colour	Notes
GUB 1	8/8.4	black	compatible silicone
GUB 2	10/10.4	black	compatible silicone
GUB 3	12/12.4	black	compatible silicone
GUW 1	8/8.4	white	silicone
GUW 2	10/10.4	white	silicone
GUW 3	12/12.4	white	silicone

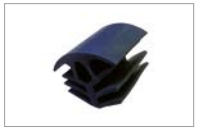

Gasket between panels

Code	Colour
GV BLACK	black
GV WHITE	white

Neoprene cube between the glass panels

Code	Dimension	Colour
CB	20 x 30 x 50	black

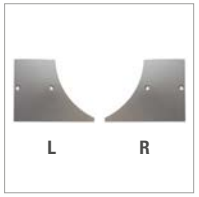

Closed end caps

Code	Colour
T4 NAT R/L	natural
T4 ARG R/L	silver
T4 9010 R/L	ral 9010
T4 CR* R/L	15 micron glossy
T4 CP* R/L	champagne
T4 DBZ* R/L	dark bronze
T4 GBR* R/L	burnished grey
T4 LGN* R/L	wood effect
T4 ORO* R/L	matt gold
T4 CTN* R/L	corten
T4 BK* R/L	black anodised

* on request

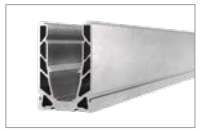

Solid perforated base profile

Code	Length
PL1 200	3-6 m

GARDA clamp

Code	Glass dimensions
PZ 8	8/8.4
PZ10	10/10.4
PZ12	12/12.4

Glass off-set device with plastic .2

Code	Glass dimensions
CO	8/8.2 - 10/10.2 - 12/12.2

Pair of accessories for laying on the inside only

Code	Notes
IN	Insert into the clamps in the prepared slots

Temporary cover

Code	Length	Colour
KCH	3-6 m	natural

Neoprene cube between the glass panels

Code	Dimension	Colour
CB	20 x 30 x 50	black

Threaded rod

Code	Length	Notes
TACH 14	140 mm	M10 steel 8.8 galvanised

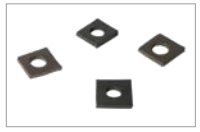

Anti-leakage water seal

Code
GAQ

GARDA AP 300

Upper carter			
Code	Length	Colour	
KS NAT	3-6 m	natural	
KS ARG	3-6 m	silver	
KS INOX	3-6 m	brushed	
KS 9010	3-6 m	ral 9010	
KS CR*	3 m	15 micron glossy	
KS CP*	3 m	champagne	
KS DBZ*	3-6 m	dark bronze	
KS GBR*	3-6 m	burnished grey	
KS LGN*	3-6 m	wood effect	
KS ORO*	3 m	matt gold	
KS CTN*	3-6 m	corten	
KS BK*	3-6 m	black anodised	

* on request

Upper carter			
Code	Length	Colour	
KSo NAT	3-6 m	natural	
KSo ARG	3-6 m	silver	
KSo 9010	3-6 m	white ral 9010	

Extension for screwdriver including insert		
Code	Notes	
PR55	Extension for screwdriver including coupling	
PR INS	Replacement insert for extension accessory	

Carter gasket				
Code	Glass dimensions	Colour	Notes	
GUB 1	8/8.4	black	compatible silicone	
GUB 2	10/10.4	black	compatible silicone	
GUB 3	12/12.4	black	compatible silicone	
GUW 1	8/8.4	white	silicone	
GUW 2	10/10.4	white	silicone	
GUW 3	12/12.4	white	silicone	

Solid perforated base profile		
Code	Length	
PL1 300	3-6 m	

GARDA clamp		
Code	Glass dimensions	
PZ 8	8/8.4	
PZ10	10/10.4	
PZ12	12/12.4	

Glass off-set device with plastic .2		
Code	Glass dimensions	
CO8	8/8.2 - 10/10.2 - 12/12.2	

Pair of accessories for laying on the inside only		
Code	Notes	
IN	Insert into the clamps in the prepared slots	

Temporary cover			
Code	Length	Colour	
KCH	3-6 m	natural	

Extension for screwdriver including insert		
Code	Notes	
PR55	Extension for screwdriver including coupling	
PR INS	Replacement insert for extension accessory	

Upper carter			
Code	Length	Colour	
KSo NAT	3-6 m	natural	
KSo ARG	3-6 m	silver	
KSo 9010	3-6 m	white ral 9010	

GARDA AP 200 SPECIAL

Upper carter

Code	Length	Colour
KS NAT	3-6 m	natural
KS ARG	3-6 m	silver
KS INOX	3-6 m	brushed
KS 9010	3-6 m	ral 9010
KS CR*	3 m	15 micron glossy
KS CP*	3 m	champagne
KS DBZ*	3-6 m	dark bronze
KS GBR*	3-6 m	burnished grey
KS LGN*	3-6 m	wood effect
KS ORO*	3 m	matt gold
KS CTN*	3-6 m	corten
KS BK*	3-6 m	black anodised

* on request

Carter gasket

Code	Glass dimensions	Colour	Notes
GUB 1	8/8.4	black	compatible silicone
GUB 2	10/10.4	black	compatible silicone
GUB 3	12/12.4	black	compatible silicone
GUW 1	8/8.4	white	silicone
GUW 2	10/10.4	white	silicone
GUW 3	12/12.4	white	silicone

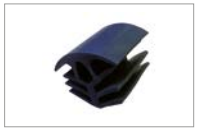

Gasket between panels

Code	Colour
GV BLACK	black
GV WHITE	white

Neoprene cube between the glass panels

Code	Dimension	Colour
CB	20 x 30 x 50	black

Solid perforated base profile

Code	Length
PL1 200 S	3-6 m

GARDA clamp

Code	Glass dimensions
PZ 8	8/8.4
PZ10	10/10.4
PZ12	12/12.4

Glass off-set device with plastic .2

Code	Glass dimensions
CO	8/8.2 - 10/10.2 - 12/12.2

Pair of accessories for laying on the inside only

Code	Notes
IN	Insert into the clamps in the prepared slots

Temporary cover

Code	Length	Colour
KCH	3-6 m	natural

Upper carter

Code	Length	Colour
KSo NAT	3-6 m	natural
KSo ARG	3-6 m	silver
KSo 9010	3-6 m	white ral 9010

Upper carter

Code	Length	Colour
KS NAT	3-6 m	natural
KS ARG	3-6 m	silver
KS INOX	3-6 m	brushed
KS 9010	3-6 m	ral 9010
KS CR*	3 m	15 micron glossy
KS CP*	3 m	champagne
KS DBZ*	3-6 m	dark bronze
KS GBR*	3-6 m	burnished grey
KS LGN*	3-6 m	wood effect
KS ORO*	3 m	matt gold
KS CTN*	3-6 m	corten
KS BK*	3-6 m	black anodised

* on request

Side carter

Code	Length	Colour
KL NAT	3-6 m	natural
KL ARG	3-6 m	silver
KL INOX	3-6 m	brushed
KL 9010	3-6 m	ral 9010
KL CR*	3 m	15 micron glossy
KL CP*	3 m	champagne
KL DBZ*	3-6 m	dark bronze
KL GBR*	3-6 m	burnished grey
KL LGN*	3-6 m	wood effect
KL ORO*	3 m	matt gold
KL CTN*	3-6 m	corten
KL BK*	3-6 m	black anodised

* on request

Carter gasket

Code	Glass dimensions	Colour	Notes
GUB 1	8/8.4	black	compatible silicone
GUB 2	10/10.4	black	compatible silicone
GUB 3	12/12.4	black	compatible silicone
GUW 1	8/8.4	white	silicone
GUW 2	10/10.4	white	silicone
GUW 3	12/12.4	white	silicone

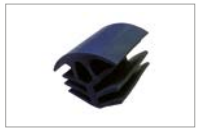

Gasket between panels

Code	Colour
GV BLACK	black
GV WHITE	white

Neoprene cube between the glass panels

Code	Dimension	Colour
CB	20 x 30 x 50	black

Threaded rod

Code	Length	Notes
TACH 14	140 mm	M10 steel 8.8 galvanised

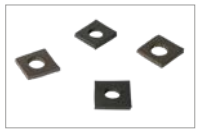

Anti-leakage water seal

Code
GAQ

Extension for screwdriver including insert

Code	Notes
PR55	Extension for screwdriver including coupling
PR INS	Replacement insert for extension accessory

GARDA FS 200

Solid perforated base profile		
Code	Length	
PL2 200	3-6 m	

GARDA clamp		
Code	Glass dimensions	
PZ 8	8/8.4	
PZ10	10/10.4	
PZ12	12/12.4	

Glass off-set device with plastic .2		
Code	Glass dimensions	
CO	8/8.2 - 10/10.2 - 12/12.2	

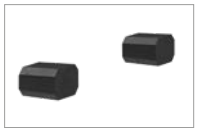

Pair of accessories for laying on the inside only		
Code	Notes	
IN	Insert into the clamps in the prepared slots	

Perforated floor guide for water drainage			
Code	Length	Colour	
GP 1	L 110 mm	natural	

Temporary cover			
Code	Length	Colour	
KCH	3-6 m	natural	

Upper carter			
Code	Length	Colour	
KS NAT	3-6 m	natural	
KS ARG	3-6 m	silver	
KS INOX	3-6 m	brushed	
KS 9010	3-6 m	ral 9010	
KS CR*	3 m	15 micron glossy	
KS CP*	3 m	champagne	
KS DBZ*	3-6 m	dark bronze	
KS GBR*	3-6 m	burnished grey	
KS LGN*	3-6 m	wood effect	
KS ORO*	3 m	matt gold	
KS CTN*	3-6 m	corten	
KS BK*	3-6 m	black anodised	

* on request

Side carter			
Code	Length	Colour	
KL NAT	3-6 m	natural	
KL ARG	3-6 m	silver	
KL INOX	3-6 m	brushed	
KL 9010	3-6 m	ral 9010	
KL CR*	3 m	15 micron glossy	
KL CP*	3 m	champagne	
KL DBZ*	3-6 m	dark bronze	
KL GBR*	3-6 m	burnished grey	
KL LGN*	3-6 m	wood effect	
KL ORO*	3 m	matt gold	
KL CTN*	3-6 m	corten	
KL BK*	3-6 m	black anodised	

* on request

Upper carter

Code	Length	Colour
KSo NAT	3-6 m	natural
KSo ARG	3-6 m	silver
KSo 9010	3-6 m	white ral 9010

Lower carter

Code	Length	Colour
KI NAT	3-6 m	natural
KI ARG	3-6 m	silver
KI INOX	3-6 m	brushed
KI 9010	3-6 m	ral 9010
KI CR*	3 m	15 micron glossy
KI CP*	3 m	champagne
KI DBZ*	3-6 m	dark bronze
KI GBR*	3-6 m	burnished grey
KI LGN*	3-6 m	wood effect
KI ORO*	3 m	matt gold
KI CTN*	3-6 m	corten
KI BK*	3-6 m	black anodised

* on request

Carter gasket

Code	Glass dimensions	Colour	Notes
GUB 1	8/8.4	black	compatible silicone
GUB 2	10/10.4	black	compatible silicone
GUB 3	12/12.4	black	compatible silicone
GUW 1	8/8.4	white	silicone
GUW 2	10/10.4	white	silicone
GUW 3	12/12.4	white	silicone

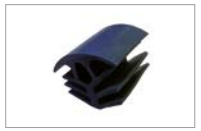

Gasket between panels

Code	Colour
GV BLACK	black
GV WHITE	white

Neoprene cube between the glass panels

Code	Dimension	Colour
CB	20 x 30 x 50	black

Closed end caps

Code	Colour
T3 NAT R/L	natural
T3 ARG R/L	silver
T3 INOX R/L	brushed
T3 9010 R/L	ral 9010
T3 CR* R/L	15 micron glossy
T3 CP* R/L	champagne
T3 DBZ* R/L	dark bronze
T3 GBR* R/L	burnished grey
T3 LGN* R/L	wood effect
T3 ORO* R/L	matt gold
T3 CTN* R/L	corten
T3 BK* R/L	black anodised

* on request

Threaded rod

Code	Length	Notes
TACH 14	140 mm	M10 steel 8.8 galvanised

Extension for screwdriver including insert

Code	Notes
PR55	Extension for screwdriver including coupling
PR INS	Replacement insert for extension accessory

GARDA FS 200 SPECIAL

Solid perforated base profile		
Code	Length	
PL2 200 S	3-6 m	

GARDA clamp		
Code	Glass dimensions	
PZ 8	8/8.4	
PZ10	10/10.4	
PZ12	12/12.4	

Glass off-set device with plastic .2		
Code	Glass dimensions	
CO	8/8.2 - 10/10.2 - 12/12.2	

Pair of accessories for laying on the inside only		
Code	Notes	
IN	Insert into the clamps in the prepared slots	

Temporary cover			
Code	Length	Colour	
KCH	3-6 m	natural	

Upper carter			
Code	Length	Colour	
KSo NAT	3-6 m	natural	
KSo ARG	3-6 m	silver	
KSo 9010	3-6 m	white ral 9010	

Bent side carter			
Code	Length	Colour	
KLP NAT	3-6 m	natural	
KLP ARG	3-6 m	silver	
KLP 9010	3-6 m	ral 9010	
KLP CR*	3 m	15 micron glossy	
KLP CP*	3 m	champagne	
KLP DBZ*	3-6 m	dark bronze	
KLP GBR*	3-6 m	burnished grey	
KLP LGN*	3-6 m	wood effect	
KLP ORO*	3 m	matt gold	
KLP CTN*	3-6 m	corten	
KLP BK*	3-6 m	black anodised	

* on request

Upper carter			
Code	Length	Colour	
KS NAT	3-6 m	natural	
KS ARG	3-6 m	silver	
KS INOX	3-6 m	brushed	
KS 9010	3-6 m	ral 9010	
KS CR*	3 m	15 micron glossy	
KS CP*	3 m	champagne	
KS DBZ*	3-6 m	dark bronze	
KS GBR*	3-6 m	burnished grey	
KS LGN*	3-6 m	wood effect	
KS ORO*	3 m	matt gold	
KS CTN*	3-6 m	corten	
KS BK*	3-6 m	black anodised	

* on request

Extension for screwdriver including insert

Code	Notes
PR55	Extension for screwdriver including coupling
PR INS	Replacement insert for extension accessory

Carter gasket

Code	Glass dimensions	Colour	Notes
GUB 1	8/8.4	black	compatible silicone
GUB 2	10/10.4	black	compatible silicone
GUB 3	12/12.4	black	compatible silicone
GUW 1	8/8.4	white	silicone
GUW 2	10/10.4	white	silicone
GUW 3	12/12.4	white	silicone

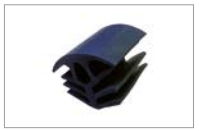

Gasket between panels

Code	Colour
GV BLACK	black
GV WHITE	white

Neoprene cube between the glass panels

Code	Dimension	Colour
CB	20 x 30 x 50	black

Threaded rod

Code	Length	Notes
TACH 14	140 mm	M10 steel 8.8 galvanised

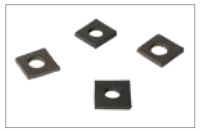

Anti-leakage water seal

Code
GAQ

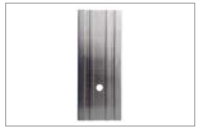

Perforated floor guide for water drainage

Code	Length	Colour
GP 2	L 198 mm	

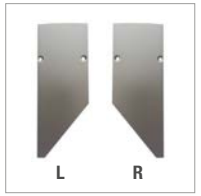

Closed end caps

Code	Colour
T5 NAT R/L	natural
T5 ARG R/L	silver
T5 9010 R/L	ral 9010
T5 CR* R/L	15 micron glossy
T5 CP* R/L	champagne
T5 DBZ* R/L	dark bronze
T5 GBR* R/L	burnished grey
T5 LGN* R/L	wood effect
T5 ORO* R/L	matt gold
T5 CTN* R/L	corten
T5 BK* R/L	black anodised

* on request

GARDA FS 300 WITH REINFORCEMENT (flat or tubular not included)

Solid perforated base profile		
Code	Length	
PL2 300	3-6 m	

Temporary cover			
Code	Length	Colour	
KCH	3-6 m	natural	

Upper carter			
Code	Length	Colour	
KS NAT	3-6 m	natural	
KS ARG	3-6 m	silver	
KS INOX	3-6 m	brushed	
KS 9010	3-6 m	ral 9010	
KS CR*	3 m	15 micron glossy	
KS CP*	3 m	champagne	
KS DBZ*	3-6 m	dark bronze	
KS GBR*	3-6 m	burnished grey	
KS LGN*	3-6 m	wood effect	
KS ORO*	3 m	matt gold	
KS CTN*	3-6 m	corten	
KS BK*	3-6 m	black anodised	

* on request

GARDA clamp		
Code	Glass dimensions	
PZ 8	8/8.4	
PZ10	10/10.4	
PZ12	12/12.4	

Upper carter			
Code	Length	Colour	
KSo NAT	3-6 m	natural	
KSo ARG	3-6 m	silver	
KSo 9010	3-6 m	white ral 9010	

Side carter			
Code	Length	Colour	
KL NAT	3-6 m	natural	
KL ARG	3-6 m	silver	
KL INOX	3-6 m	brushed	
KL 9010	3-6 m	ral 9010	
KL CR*	3 m	15 micron glossy	
KL CP*	3 m	champagne	
KL DBZ*	3-6 m	dark bronze	
KL GBR*	3-6 m	burnished grey	
KL LGN*	3-6 m	wood effect	
KL ORO*	3 m	matt gold	
KL CTN*	3-6 m	corten	
KL BK*	3-6 m	black anodised	

* on request

Glass off-set device with plastic .2		
Code	Glass dimensions	
CO	8/8.2 - 10/10.2 - 12/12.2	

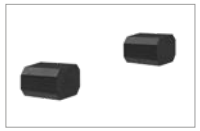

Pair of accessories for laying on the inside only		
Code	Notes	
IN	Insert into the clamps in the prepared slots	

CARTER SPECIAL

Extension for screwdriver including insert	
Code	Notes
PR55	Extension for screwdriver including coupling
PR INS	Replacement insert for extension accessory

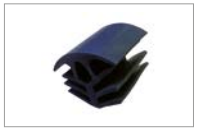

Gasket between panels	
Code	Colour
GV BLACK	black
GV WHITE	white

Carter gasket			
Code	Glass dimensions	Colour	Notes
GUB 1	8/8.4	black	compatible silicone
GUB 2	10/10.4	black	compatible silicone
GUB 3	12/12.4	black	compatible silicone
GUW 1	8/8.4	white	silicone
GUW 2	10/10.4	white	silicone
GUW 3	12/12.4	white	silicone

Neoprene cube between the glass panels		
Code	Dimension	Colour
CB	20 x 30 x 50	black

Threaded rod		
Code	Length	Notes
TACH 14	140 mm	M10 steel 8.8 galvanised

Perforated floor guide for water drainage		
Code	Length	Colour
GP 1	L 110 mm	natural

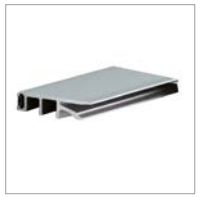

Special horizontal sheet metal carter		
Code	Length	Colour
KXO LO NAT	3-6 m	natural
KXO LO ARG	3-6 m	silver
KXO LO INOX	3-6 m	brushed
KXO LO 9010	3-6 m	ral 9010
KXO LO CR*	3 m	15 micron glossy
KXO LO CP*	3 m	champagne
KXO LO DBZ*	3-6 m	dark bronze
KXO LO GBR*	3-6 m	burnished grey
KXO LO LGN*	3-6 m	wood effect
KXO LO ORO*	3 m	matt gold
KXO LO CTN*	3-6 m	corten
KXO LO BK*	3-6 m	black anodised

* on request

Special vertical sheet metal or plasterboard carter		
Code	Length	Colour
KXV LV NAT	3-6 m	natural
KXV LV ARG	3-6 m	silver
KXV LV INOX	3-6 m	brushed
KXV LV 9010	3-6 m	ral 9010
KXV LV CR*	3 m	15 micron glossy
KXV LV CP*	3 m	champagne
KXV LV DBZ*	3-6 m	dark bronze
KXV LV GBR*	3-6 m	burnished grey
KXV LV LGN*	3-6 m	wood effect
KXV LV ORO*	3 m	matt gold
KXV LV CTN*	3-6 m	corten
KXV LV BK*	3-6 m	black anodised

* on request

GARDA MINI

Solid perforated base profile

Code	Length	Colour	
PL MINI NAT	3-6 m	natural	
PL MINI ARG	3-6 m	silver	
PL MINI 9010	3-6 m	RAL 9010	
PL MINI CR*	3 m	15 micron glossy	
PL MINI CP*	3 m	champagne	
PL MINI DBZ*	3-6 m	dark bronze	
PL MINI GBR*	3-6 m	burnished grey	
PL MINI LGN*	3-6 m	wood effect	
PL MINI ORO*	3 m	matt gold	
PL MINI CTN*	3-6 m	corten	
PL MINI BK*	3-6 m	black anodised	

* on request

MINI clamp

Code	
PZ MINI	

Carter gasket

Code	Glass dimensions	Colour	Notes	
GUB 1	8/8.4 interno	black	compatible silicone	
GUB 3	8/8.4 esterno	black	compatible silicone	
GUW 1	8/8.4 interno	white	silicone	
GUW 3	8/8.4 esterno	white	silicone	

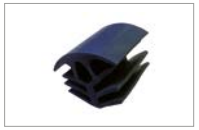

Gasket between panels

Code	Colour	
GV BLACK	black	
GV WHITE	white	

Neoprene cube between the glass panels

Code	Dimension	Colour	
CB	20 x 30 x 50	black	

Upper carter

Code	Length	Colour	
KS MINI NAT	3-6 m	natural	
KS MINI ARG	3-6 m	silver	
KS MINI 9010	3-6 m	ral 9010	
KS MINI CR*	3 m	15 micron glossy	
KS MINI CP*	3 m	champagne	
KS MINI DBZ*	3-6 m	dark bronze	
KS MINI GBR*	3-6 m	burnished grey	
KS MINI LGN*	3-6 m	wood effect	
KS MINI ORO*	3 m	matt gold	
KS MINI CTN*	3-6 m	corten	
KS MINI BK*	3-6 m	black anodised	

* on request

Anti-scavenging carter

Code	Length	Colour	
KL MINI NAT	3-6 m	natural	
KL MINI ARG	3-6 m	silver	
KL MINI 9010	3-6 m	ral 9010	
KL MINI CR*	3 m	15 micron glossy	
KL MINI CP*	3 m	champagne	
KL MINI DBZ*	3-6 m	dark bronze	
KL MINI GBR*	3-6 m	burnished grey	
KL MINI LGN*	3-6 m	wood effect	
KL MINI ORO*	3 m	matt gold	
KL MINI CTN*	3-6 m	corten	
KL MINI BK*	3-6 m	black anodised	

* on request

Mechanical plug

Code	
TM	

Thickness for glass support	
Code	
SAV	

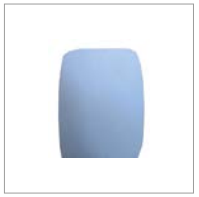

Closed end caps		
Code	Colour	
T2 NAT MINI R/L	natural	
T2 ARG MINI R/L	silver	
T2 9010 MINI R/L	ral 9010	
T2 CR* R/L	15 micron glossy	
T2 CP* R/L	champagne	
T2 DBZ* R/L	dark bronze	
T2 GBR* R/L	burnished grey	
T2 LGN* R/L	wood effect	
T2 ORO* R/L	matt gold	
T2 CTN* R/L	corten	
T2 BK* R/L	black anodised	

* on request

Closed end cap with anti-scavenging function		
Code	Colour	
T2 AS NAT MINI R/L	natural	
T2 AS ARG MINI R/L	silver	
T2 AS 9010 MINI R/L	ral 9010	
T2 AS CR MINI R/L	15 micron glossy	
T2 AS CP MINI R/L	champagne	
T2 AS DBZ MINI R/L	dark bronze	
T2 AS GBR MINI R/L	burnished grey	
T2 AS LGN* MINI R/L	wood effect	
T2 AS ORO* MINI R/L	matt gold	
T2 AS CTN* MINI R/L	corten	
T2 AS BK* MINI R/L	black anodised	

* on request

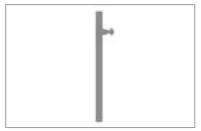

MINI interior gasket	
Code	
GI INTERNA	

POINT

Satin-finished adjustable stud					
Code	Adjustment	Diameter	Glass	Material	
BR304	42-52	48 mm	10-21,52	AISI 304	
BR316	27-32	48 mm	10-21,52	AISI 316	
BR316 BIG	42-52	48 mm	10-21,52	AISI 316	

HANDRAIL

Round Handrail

Code	Length	Colour	Notes	
CORD NAT	3-6 m	natural	For glass 8/8.4-10/10.4-12/12.4	
CORD ARG	3-6 m	silver	For glass 8/8.4-10/10.4-12/12.4	
CORD INOX	3-6 m	brushed	For glass 8/8.4-10/10.4-12/12.4	
CORD 9010	3-6 m	RAL 9010	For glass 8/8.4-10/10.4-12/12.4	
CORD CR*	3 m	15 micron glossy	For glass 8/8.4-10/10.4-12/12.4	
CORD CP*	3 m	champagne	For glass 8/8.4-10/10.4-12/12.4	
CORD DBZ*	3-6 m	dark bronze	For glass 8/8.4-10/10.4-12/12.4	
CORD GBR*	3-6 m	burnished grey	For glass 8/8.4-10/10.4-12/12.4	
CORD LGN*	3-6 m	wood effect	For glass 8/8.4-10/10.4-12/12.4	
CORD ORO*	3 m	matt gold	For glass 8/8.4-10/10.4-12/12.4	
CORD CTN*	3-6 m	corten	For glass 8/8.4-10/10.4-12/12.4	
CORD BK*	3-6 m	black anodised	For glass 8/8.4-10/10.4-12/12.4	

* on request

Compact Handrail

Code	Length	Colour	Notes	
CORCO NAT	3-6 m	natural	For glass 8/8.4-10/10.4-12/12.4	
CORCO ARG	3-6 m	silver	For glass 8/8.4-10/10.4-12/12.4	
CORCO INOX	3-6 m	brushed	For glass 8/8.4-10/10.4-12/12.4	
CORCO 9010	3-6 m	RAL 9010	For glass 8/8.4-10/10.4-12/12.4	
CORCO CR*	3 m	15 micron glossy	For glass 8/8.4-10/10.4-12/12.4	
CORCO CP*	3 m	champagne	For glass 8/8.4-10/10.4-12/12.4	
CORCO DBZ*	3-6 m	dark bronze	For glass 8/8.4-10/10.4-12/12.4	
CORCO GBR*	3-6 m	burnished grey	For glass 8/8.4-10/10.4-12/12.4	
CORCO LGN*	3-6 m	wood effect	For glass 8/8.4-10/10.4-12/12.4	
CORCO ORO*	3 m	matt gold	For glass 8/8.4-10/10.4-12/12.4	
CORCO CTN*	3-6 m	corten	For glass 8/8.4-10/10.4-12/12.4	
CORCO BK*	3-6 m	black anodised	For glass 8/8.4-10/10.4-12/12.4	

* on request

Double-sided adhesive tape for Mini handrail

Code	Length	
BAD 15	33 m x 15 mm	

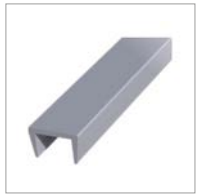

Mini Handrail

Code	Length	Colour	Notes	
COMN NAT	3-6 m	natural	For glass 8/8.4-10/10.4	
COMN ARG	3-6 m	silver	For glass 8/8.4-10/10.4	
COMN INOX	3-6 m	brushed	For glass 8/8.4-10/10.4	
COMN 9010	3-6 m	RAL 9010	For glass 8/8.4-10/10.4	
COMN CR*	3 m	15 micron glossy	For glass 8/8.4-10/10.4	
COMN CP*	3 m	champagne	For glass 8/8.4-10/10.4	
COMN DBZ*	3-6 m	dark bronze	For glass 8/8.4-10/10.4	
COMN GBR*	3-6 m	burnished grey	For glass 8/8.4-10/10.4	
COMN LGN*	3-6 m	wood effect	For glass 8/8.4-10/10.4	
COMN ORO*	3 m	matt gold	For glass 8/8.4-10/10.4	
COMN CTN*	3-6 m	corten	For glass 8/8.4-10/10.4	
COMN BK*	3-6 m	black anodised	For glass 8/8.4-10/10.4	

* on request

Gasket for Round and Compact handrails

Code	Glass dimensions	
GC 8	8/8.4	
GC 10	10/10.4	
GC 12	12/12.4	

Straight joint for Round and Compact handrails

Code	
SQRETT	

Corner joint for Round and Compact handrails

Code	
GIA	

LAMINA

Round handrail cap

Code	Colour
TCORD NAT	natural
TCORD ARG	silver
TCORD INOX	brushed
TCORD 9010	ral 9010
TCORD CR*	15 micron glossy
TCORD CP*	champagne
TCORD DBZ*	dark bronze
TCORD GBR*	burnished grey
TCORD LGN*	wood effect
TCORD ORO*	matt gold
TCORD CTN*	corten
TCORD BK*	black anodised

* on request

Compact handrail cap

Code	Colour
TCORCO NAT	natural
TCORCO ARG	silver
TCORCO INOX	brushed
TCORCO 9010	ral 9010
TCORCO CR*	15 micron glossy
TCORCO CP*	champagne
TCORCO DBZ*	dark bronze
TCORCO GBR*	burnished grey
TCORCO LGN*	wood effect
TCORCO ORO*	matt gold
TCORCO CTN*	corten
TCORCO BK*	black anodised

* on request

Solid perforated base profile

Code	Length
PL1 LAMINA	3-6 m

GARDA clamp

Code	Glass dimensions
PZ 8	8/8.4
PZ10	10/10.4
PZ12	12/12.4

Extension for screwdriver including insert

Code	Notes
PR55	Extension for screwdriver including coupling
PR INS	Replacement insert for extension accessory

Side carter

Code	Length	Colour
KL NAT	3-6 m	natural
KL ARG	3-6 m	silver
KL 9010	3-6 m	ral 9010
KL CR*	3 m	15 micron glossy
KL CP*	3 m	champagne
KL DBZ*	3-6 m	dark bronze
KL GBR*	3-6 m	burnished grey
KL LGN*	3-6 m	wood effect
KL ORO*	3 m	matt gold
KL CTN*	3-6 m	corten
KL BK*	3-6 m	black anodised

* on request

Curved side carter

Code	Length	Colour	
KLC NAT	3-6 m	natural	
KLC ARG	3-6 m	silver	
KLC 9010	3-6 m	ral 9010	
KLC CR*	3 m	15 micron glossy	
KLC CP*	3 m	champagne	
KLC DBZ*	3-6 m	dark bronze	
KLC GBR*	3-6 m	burnished grey	
KLC LGN*	3-6 m	wood effect	
KLC ORO*	3 m	matt gold	
KLC CTN*	3-6 m	corten	
KLC BK*	3-6 m	black anodised	

* on request

Threaded rod

Code	Length	Notes	
TACH 14	140 mm	M10 steel 8.8 galvanised	

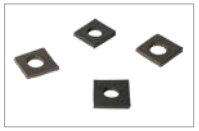

Anti-leakage gasket selling in Pair

Code	
GAQ	

Carter gasket

Code	Glass dimensions	Colour	Notes	
GUB 1	8/8.4	black	compatible silicone	
GUB 2	10/10.4	black	compatible silicone	
GUB 3	12/12.4	black	compatible silicone	
GUW 1	8/8.4	white	silicone	
GUW 2	10/10.4	white	silicone	
GUW 3	12/12.4	white	silicone	

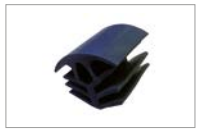

Gasket between panels

Code	Colour	
GV BLACK	black	
GV WHITE	white	

Neoprene cube between the glass panels

Code	Dimension	Colour	
CB	20 x 30 x 50	black	

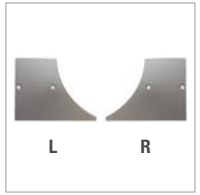

Closed end caps

Code	Colour	
T4 NAT R/L	natural	
T4 ARG R/L	silver	
T4 9010 R/L	ral 9010	
T4 CR* R/L	15 micron glossy	
T4 CP* R/L	champagne	
T4 DBZ* R/L	dark bronze	
T4 GBR* R/L	burnished grey	
T4 LGN* R/L	wood effect	
T4 ORO* R/L	matt gold	
T4 CTN* R/L	corten	
T4 BK* R/L	black anodised	

* on request

Glazing bead

Code		
FV	provide 2 pieces per glass panel	

LED Components

Indoor LED strips			
Code	Sizes	Colour	
IP20B	bobina 5m - 182 led/metro	natural white	
IP20C	bobina 5m - 120 led/metro	primary colours	

Outdoor LED strips			
Code	Sizes	Colour	
IP65B	5m reel - 64 leds/meter	natural white	
IP65C	5m reel - 60 leds/meter	primary colours	
IP67B	5m reel - 60 leds/meter	natural white	

IP20 connectors for LED strips			
Code	Sizes	Colour	
CONB	cable 15 cm - 2-pin	natural white	
CONC	cable 15 cm - 2-pin	primary colours	

Indoor LED transformer			
Code	Power	Max. capacity LED strip	
IP20-50	50W - 24V	350 cm	
IP20-100	100W - 24V	700 cm	

Outdoor LED transformer			
Code	Power	Max. capacity LED strip	
IP67-60	60W - 24V	400 cm	
IP67-100	100W - 24V	700 cm	
IP67-150	150W - 24V	1000 cm	

Remote control for coloured LEDs		
Code		
CTR	Controller + receiver - IP20	

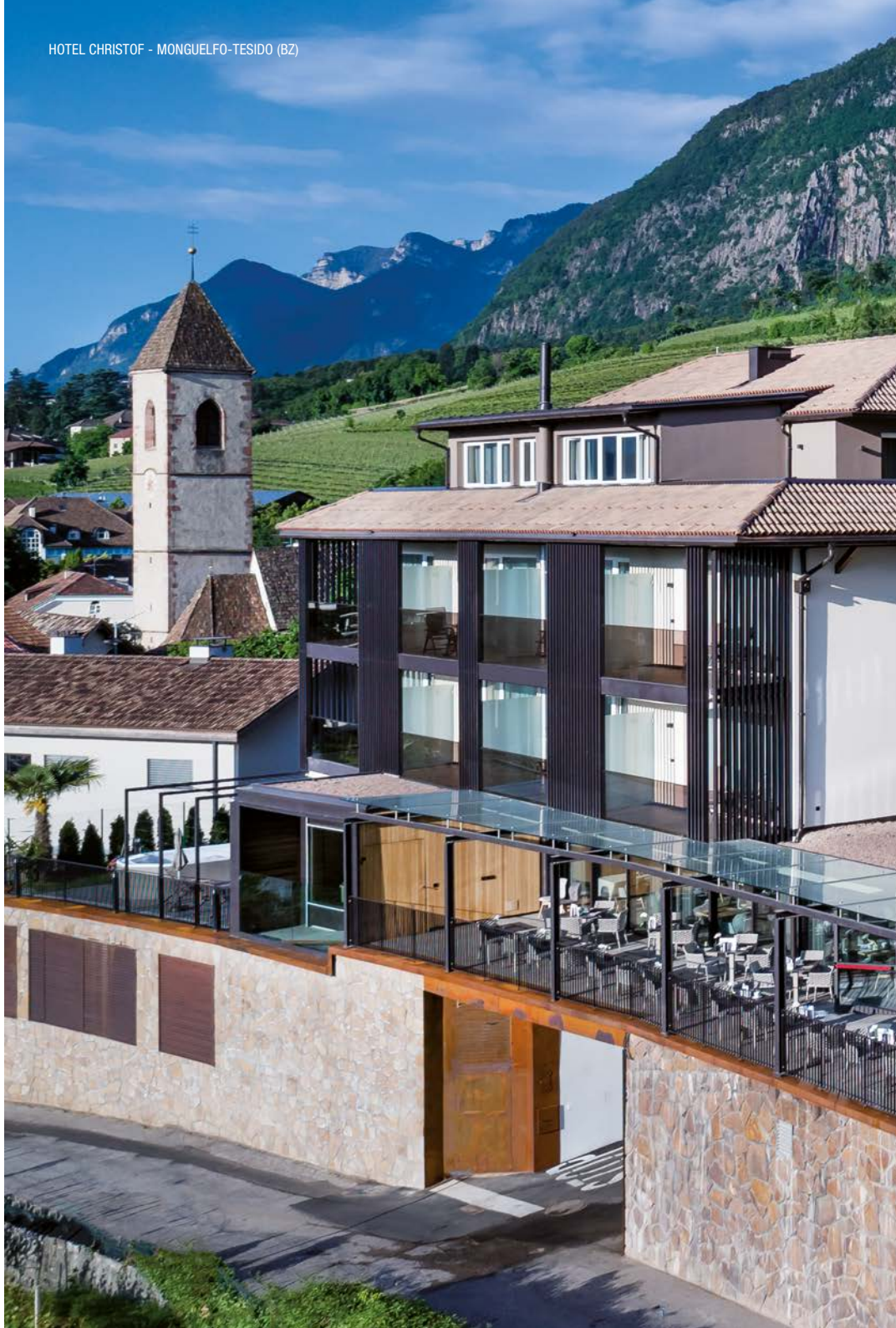

HOTEL CHRISTOF - MONGUELFO-TESIDO (BZ)

BERGMAN MOUNTAIN HOTEL - BREUIL-CERVINIA (AO)

PRIVATE RESIDENCE (BS)

10/2023

ALUVETRO
LO SGUARDO OLTRE

aluvetro.it

ALUVETRO srl subject to management
and coordination of HOLDING INVESTING srl
Via Lombardia, 4/6 - Orzinuovi (BS) - ITALY
Tel. +39 030 9444433 | Fax +39 030 9946653
info@aluvetro.it | www.aluvetro.it