ALUVETRO
LO SGUARDO OLTRE

TECHNICAL DATA SHEET

06/2023

GARDA ONE

FIXING **ABOVE FLOOR**

LOAD DESIGNED **200 kg/m**
LOAD ULTIMATE LIMIT STATE **300 kg/m**

ISTITUTO GIORDANO

Thanks to the use of glass, the balustrades guarantee maximum formal cleanliness in new construction, renovation and building restoration projects: they are available with or without handrails, according to a customisable system.

The Garda system, tested in certified laboratories, is made up of different elements (profile, fixing system, casing, laminated and tempered glass) designed to guarantee an easy and rapid assembly and an aesthetic result ideal for the world of contemporary architecture.

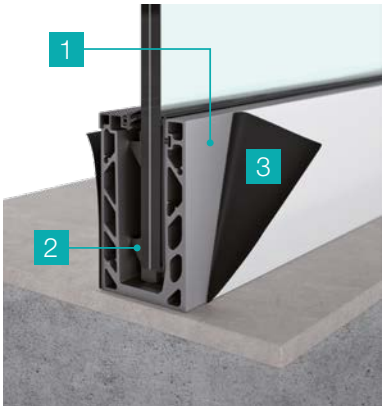

1. Extruded aluminium profile, drilled at the base every 250 mm, available in bars 6 or 3 metres and cut to size on request.
The profile undergoes a 20-micron anodising or powder-coating process that gives it a finish with aesthetic and protective characteristics that ensure durability when exposed to aggressive urban or marine atmospheres.

2. Adjustable clamps only on the inside, patented for fixing and adjusting glass (± 15 mm) with thicknesses 17.52 (8/8.4) and 21.51 (10/10.4).

3. The profile is coated on both sides with a scratch-resistant protective film to be removed after completion of the construction site. Garda ONE does not require a finishing casing.

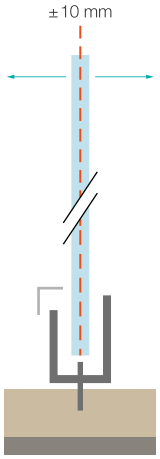

SPECIFICATION ITEMS

Garda ONE balustrade made of extruded aluminium alloy profile ENAW6063T6 (dimensions 67 x 109 mm), to be fixed above the floor, with **GP (optional)** system for external water drainage. The profiles will be coupled with alignment pins (**ALO**). The profiles will have a choice of 20 micron silver anodised or RAL 9010 painted finishes (other finishes on request) and come complete with silicone-compatible gaskets between the casing (**KSO**) and glass.
The profile includes specific accessories, known as 'clamps'(**PZo**), which enable the alignment, adjustment and fixing of the glass panels. Clamps and gaskets depend on the thickness of the glass.
The system can be completed with handrails in different formats (**Mini, Round o Compact**).

The Garda balustrade will be fitted with toughened and tempered glass sheets laminated with plastics of various types, available in various thicknesses, such as: 17.52 mm (8/8.4) with PVB plastic; 21.52 mm (10/10.4) with PVB.

The Garda ONE balustrade is tested according to UNI 11678 standard at laboratories accredited to the ministry of public works and complies with current regulations (D.M. 17/01/2018 and UNI 7697: 2015) for a thrust resistance of 2 kN/m (SLE), with load tests up to 3 kN/m, safety factor 1.5 (SLU) included on glazing up to 1100 mm above floor level.

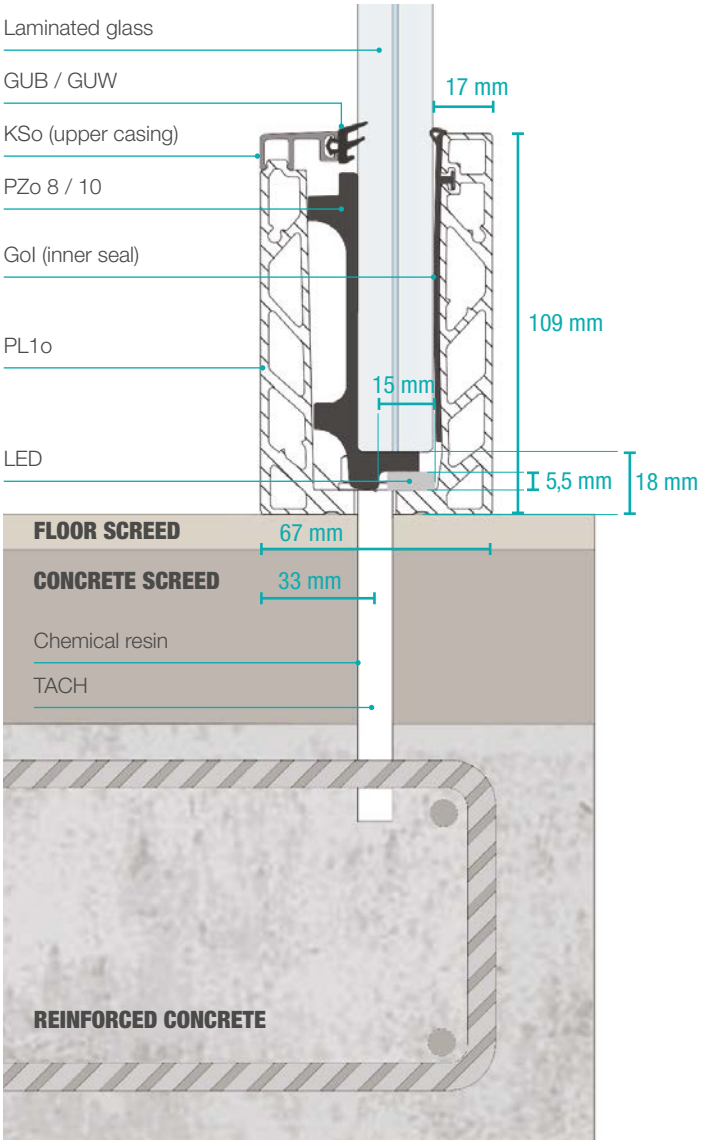

Part	Notes
PL1o 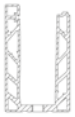	Cross-section dimensions: 67 mm x 109 mm 3 m, 6 m or customised bars drilled at the base with 250 mm pitch - ø 12 mm. Tested for a design load of 2kN/m, with a ultimate limit state load of 3kN/m with Hmax of the glass of 1100 mm
PZo 8/10 	PZ8 for glass 8/8.4 PZ10 for glass 10/10.4
KSo 	Cross-section dimensions: 11 mm x 22 mm 3 or 6 m bars or cut to length on request Various finishes available
GUB/GUW 	Gasket between glass and casing Gaskets for glass 8/8 (GUB 4) - 10/10 (GUB 2) Available in black (silicone compatible) Available in white (silicone compatible)
GoI 	Internal seal
TACH OPTIONAL 	Threaded rod with nut and washer For fixing on reinforced concrete For use in combination with two-component chemical L 140 mm - M10 8.8 galvanised steel
ALo OPTIONAL 	Alignment pin for coupling several profiles
GPo OPTIONAL 	Accessory for outward water drainage, to be positioned under the profile. 5 mm thick. 4 pieces per running metre
LED OPTIONAL 	LED strips for indoor or outdoor use Supplied in coils; white light or primary colours; with transformer. Several sizes available

SAFETY - REGULATORY REFERENCE

Below are the main regulations governing the design and testing of all balustrades and parapets, specifically glass balustrades.

UNI 7697: 2015 - 12 February 2015
"Safety Criteria in Glass Applications".
The standard applies to glass in buildings and for any other use that is not regulated by specific relevant rules, while for those that are regulated, the standard only indicates the reference to apply.
In the specifics of balustrades, it indicates the type of glass to be used.

UNI 11678:2017 - 15 May 2017
"Glass for the building industry - Glass cladding elements with fall protection function - Resistance to linear static load and dynamic load - Test methods"
The standard defines the test methods to determine the behaviour of linearly distributed static loads and dynamic loads of glass cladding elements with fall protection function and criteria for determining whether or not the test is passed.

D.M. 236/89 - 14 June 1989
Technical provisions necessary to ensure the accessibility, adaptability and easy inspection of private and public buildings, in order to overcome and eliminate architectural barriers.
With regard to parapets, it establishes the minimum height*, the criterion of non-crossability, as well as indications on the necessity or type of handrail.

* Check any indications issued by the territorial public body.

D.M. 17 January 2018 - NTC 2018 UPDATE OF TECHNICAL STANDARDS FOR CONSTRUCTION
Regarding parapets, it provides the required resistances for elements placed to protect against falling into a void.
The nominal and/or characteristic values given in the table below are inclusive of ordinary dynamic effects, provided that there is no risk of significant dynamic amplification of the response of the structures.

The overloads, or imposed loads, include the loads related to the intended use of the room; the models inherent to parapets are the linear horizontal loads Hk.

TABLE 3.1.II (EXCERPT FROM D.M. 17/01/2018 SECTION 3.1.IV - OVERLOADS

Category	Environments	qk [kN/m2]	Qk [kN]	Hk [kN/m]
	Residential environments			
A	Areas for home and residential activities, this category includes residential premises and their services, hotels (excluding areas subject to crowding), hospital rooms	2,00	2,00	**1,00**
	Common stairs, balconies, platforms	4,00	4,00	**2,00**
	Offices			
B	Cat. B1 Offices not open to the public	2,00	2,00	**1,00**
	Cat. B2 Offices open to the public	3,00	2,00	**1,00**
	Common stairs, balconies, platforms	4,00	4,00	**2,00**
	Environments susceptible to crowding			
C	Cat. C1 Areas with tables, such as schools, cafés, restaurants, banquet halls, reading halls and front desks	3,00	3,00	**1,00**
	Cat. C2 Areas with fixed seating, such as churches, theatres, cinemas, halls for conferences and waiting rooms, university lecture halls and auditoriums	4,00	4,00	**2,00**
	Cat. C3 Environments without obstacles to the movement of people, such as museums, exhibition halls, access areas to offices, hotels and hospitals, railway station lobbies	5,00	5,00	3,00
	Cat. C4 Areas with possible physical activities such as ballrooms, gyms, stages	5,00	5,00	3,00
	Cat. C5 Areas subject to large crowds, such as buildings for public events, concert halls, sports halls and grandstands, bleachers and railway platforms	5,00	5,00	3,00
	Common stairs, balconies, platforms	According to the category of use served, with the following limitations		
		≥ 4,00	≥ 4,00	≥ 2,00
	Environments for commercial use			
D	Cat. D1 Shops	4,00	4,00	**2,00**
	Cat. D2 Shopping centres, markets, department stores	5,00	5,00	**2,00**
	Common stairs, balconies, platforms	According to category of use served		
	Areas for storage and commercial and industrial use			
E	Cat. E1 Goods storage and access areas, such as libraries, archives, warehouses, manufacturing workshops	≥ 6,00	7,00	**1,00**
	Cat. E2 Industrial environments	To be assessed on a case-by-case basis		
	Garages and areas for vehicle traffic (excluding bridges)			
F - G	Cat. F Garages, traffic, parking and parking areas for light vehicles (weight at full load up to 30 kN)	2,50	2 x 10,00	**1,00**
	Cat. G Areas for traffic and parking of medium-sized vehicles (laden weight between 30 kN and 160 kN), such as access ramps, loading and unloading areas goods	To be assessed on a case-by-case basis and in any case not less than		
		5,00	2 x 50,00	1,00
	Covers			
H - I - K	Cat. H Roofs accessible for maintenance and repair only	0,50	1,20	**1,00**
	Cat. I Accessible covers of rooms of use category A to D	According to categories		
	Cat. K Covers for special uses, such as installations, heliports	To be assessed on a case-by-case basis		

TYPES OF GLASS

LOAD DESIGNED **200 kg/m**
LOAD ULTIMATE LIMIT STATE **300 kg/m**
ISTITUTO GIORDANO

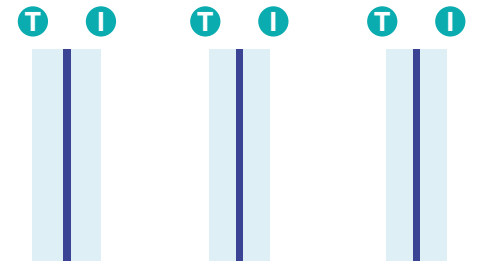

21,52 mm PVB | 17,52 mm PVB | 17,52 mm EVA

SLE kN/m	SLU kN/m	H walkway balustrade	Glass types
2,0	3,0	1100 mm	8/8.4 T + I PVB
2,0	3,0	1100 mm	10/10.4 T + I PVB
2,0	3,0	1000 mm	8/8.4 T + I EVA

FASTENING CLAMPS

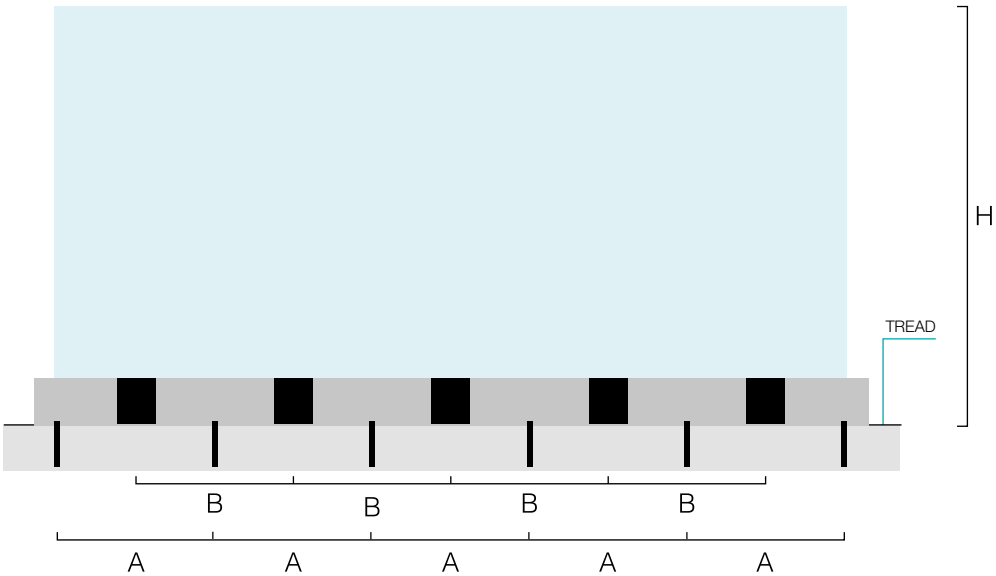

Centre-to-centre distance between fixing brackets (clamps and threaded rods)	
A	250 mm (4 fix/m)
B	250 mm (4 pcs/m)
H	≤ 1100 mm

WATER OUTFLOW ACCESSORY - GPo

Perforated aluminium accessory to be placed at the base of the profile (no. 4 pieces per linear metre, at the fasteners to the substructure), in order to raise the whole system by 5 mm and allow water to drain off.

For additional watertightness, it is recommended that fastenings to the substructure be made with two-component chemical and that **GAQ**'s special gaskets, designed to prevent water infiltration within the structural support, be used.

GP dimensions: 100 mm x 66 mm x 5 mm

CUSTOMISATION OF FINISH

The profiles are supplied as standard with a 20-micron anodised silver finish and are coated on both sides with a scratch-resistant protective film that must be removed once the construction site is complete, as they do not require an additional casing for the aesthetic finish.
On request, profiles can be supplied with a customised finish in a choice of RAL colours or with special material effects.

ANODISED
SILVER
20 micron

PAINTED WHITE
RAL 9010

RAL COLOUR
ON REQUEST

MATERIAL EFFECTS
ON REQUEST

CUSTOMISATION OF GLASS AND LEDS

Customisation of the glass can be achieved by various processes: layering with coloured plastics, internal layering enamelling, or screen printing. Furthermore, each solution can be combined with the use of LEDs to create a striking lighting effect.

Curved glass sheets can be mounted on all Garda balustrades with radii starting from a minimum of 200 cm in plan or perspective view.
To make curved balustrades in plan view, the profiles are curved, as well as the casings, according to the request.

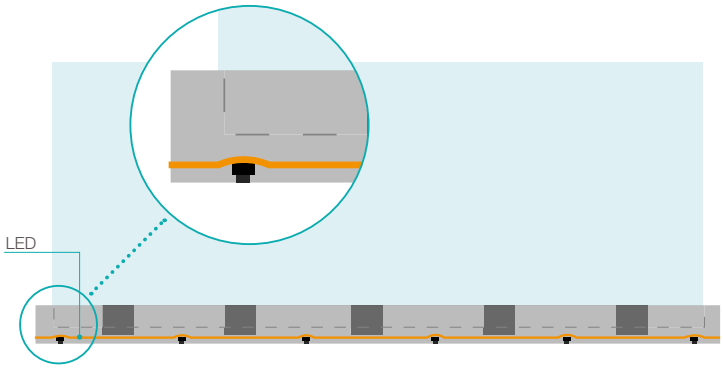

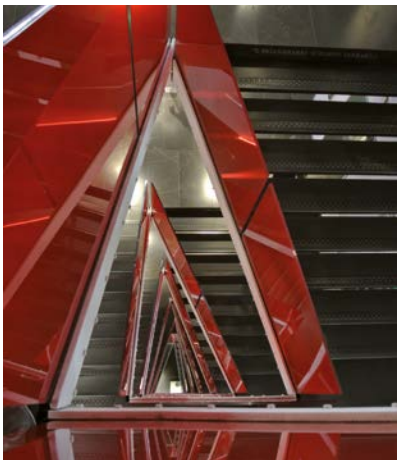

SYSTEM ASSEMBLY

Each profile is ready for installation: the balustrade is completed by fixing screws (optional), seals, casings, clamps. Final adjustment is carried out with the aid of a simple Allen key or by using the special extension (**PR55**) for the power tool, which makes tightening the adjustment screws even quicker.

The installation of **Garda ONE** is simplified thanks to the innovative system that makes it possible to assemble it safely on all balconies: the clamping of the clamps and the adjustment are only to be carried out from the inside, which benefits construction time.

SCAN THE QR CODE AND WATCH THE INSTALLATION VIDEO TUTORIAL

1 Insert the seal inside the profile, Perforate the slab with the drill, position the profile and the fixing screws.

2 Place the clamps on the inside of the profile every 25 cm and remove the foil from the outside of the profile. Do not place the clamps close to the fixing screws.

3 Insert the glass by tilting it towards the inside.
To facilitate insertion of the glass, lubricate with mild soap and water.

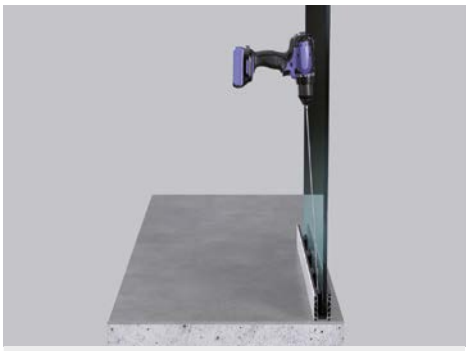

4 Adjust the inclination of the glass (±15 mm) by means of the screws on the clamps and tighten.

5 Lay the inner casing, to which the gasket was previously fitted.

6 Installation finished.

DOWNLOAD CATALOGUE AND BIM FILES AND WATCH THE INSTALLATION VIDEO

Discover all the advantages
of the Garda system at **www.aluvetro.it**